Approx. weight

Material	kg	lb
Carbon steel	5.6	12.4
Stainless steel 304 and 304L	5.7	12.5
Stainless steel 316 and 316L	5.7	12.7

Densities 7.85, 7.9 and 8.0 g/cm3.
Calculated from the dimensions as the standard gives them, with no allowance for tolerance.

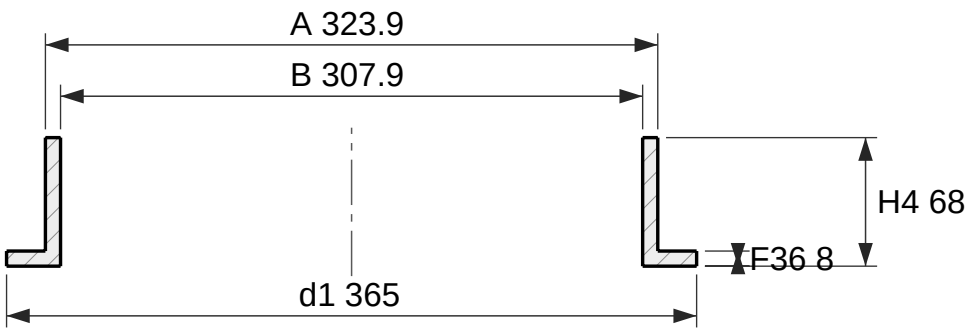

Section

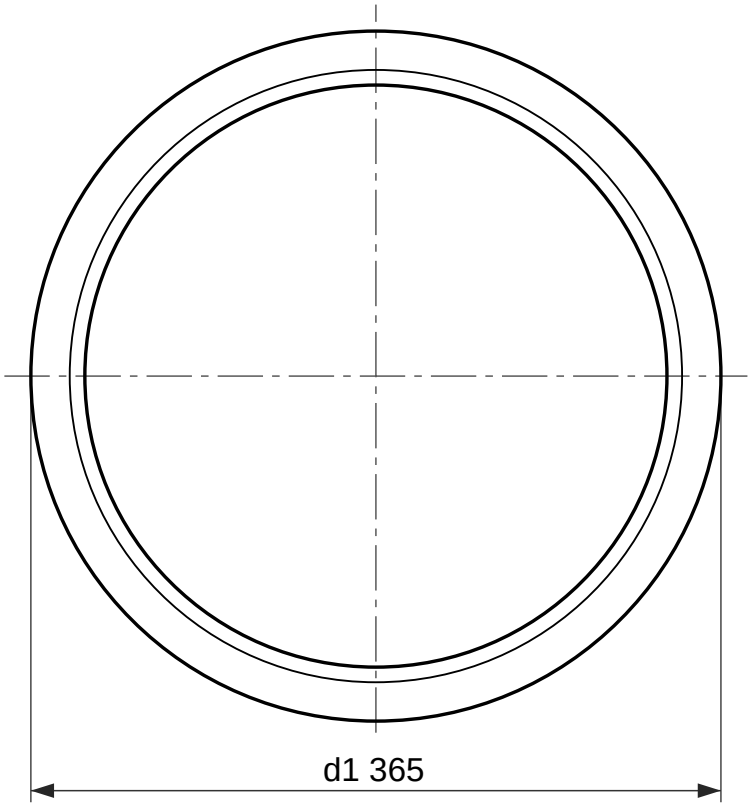

Face view

Pressed collar with long neck, EN 1092-1 type 36, PN 6

DN 300, neck 323.9 × 8

Designation: Collar EN 1092-1/36/DN 300/PN 6
Dimensions per EN 1092-1:2018, Table 11 (PN 6) and Table 8 (facing) and Annex A (wall thickness); tolerances per EN 1092-1.
Collar for a type 02 loose plate flange, which bolts over it. d1 is the lap diameter and the joint face.
5.7.2.1 does not ask for a machined jointing face on this type.
Reference drawing. The purchase order and EN 1092-1 govern.
Generated at rajendradatacenter.com/flanges/en-1092-1/

Dimension	mm	in
d1 Collar outside diameter	365	14.37
F36 Collar thickness	8	0.31
H4 Overall length	68	2.68
A Neck outside diameter (pipe OD)	323.9	12.75
S Neck wall thickness (min)	8	0.31
B Bore, A - 2S	307.9	12.12

RAJENDRA INDUSTRIAL CORPORATION
rajendradatacenter.com
Drawing RIC-EN1092-36-PN6-DN300
Scale 1:4 on A4
Units: mm (inches)
Date 2026-11-22
Quote: rajendradatacenter.com/rfq/
sales@rajendradatacenter.com
+91 74338 71355