Approx. weight

Material	kg	lb
Carbon steel	1.6	3.6
Stainless steel 304 and 304L	1.6	3.6
Stainless steel 316 and 316L	1.7	3.6

Densities 7.85, 7.9 and 8.0 g/cm3.
Calculated from the dimensions as the standard gives them, with no allowance for tolerance.

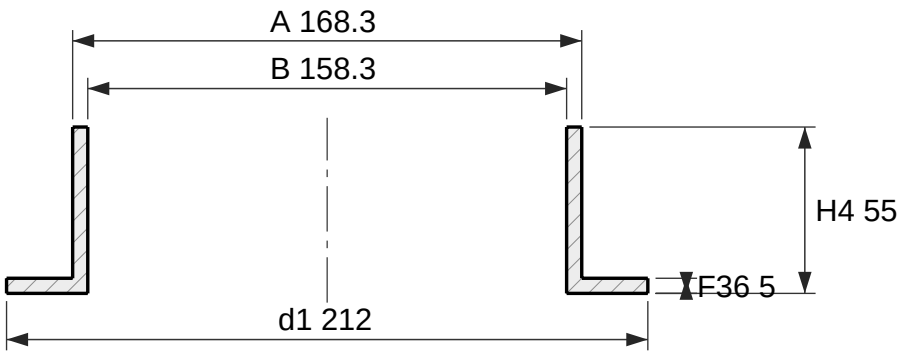

Section

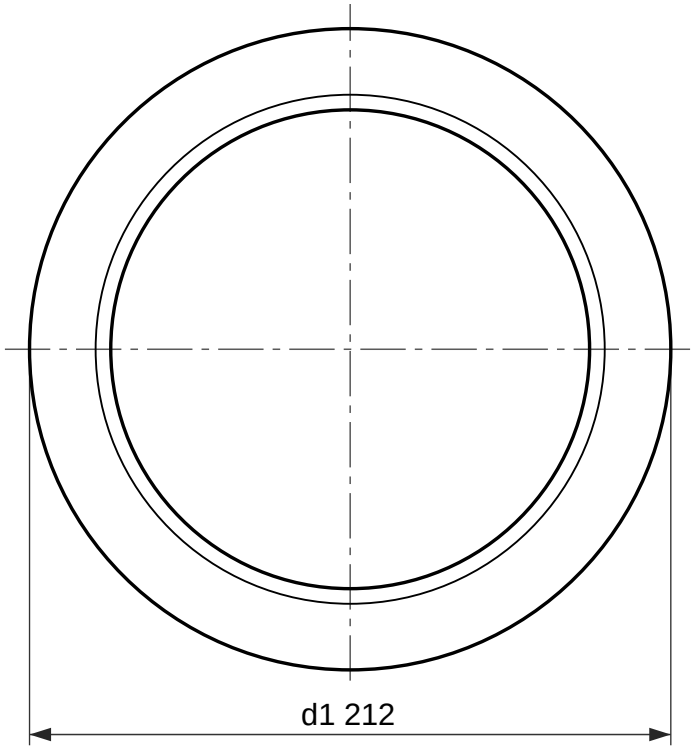

Face view

Pressed collar with long neck, EN 1092-1 type 36, PN 16

DN 150, neck 168.3 × 5

Designation: Collar EN 1092-1/36/DN 150/PN 16
Dimensions per EN 1092-1:2018, Table 13 (PN 16) and Table 8 (facing) and Annex A (wall thickness); tolerances per EN 1092-1.
Collar for a type 02 loose plate flange, which bolts over it. d1 is the lap diameter and the joint face.
5.7.2.1 does not ask for a machined jointing face on this type.
EN 1092-1 gives PN 16 the same dimensions as PN 10 in DN 150; only the marking differs.
Reference drawing. The purchase order and EN 1092-1 govern.
Generated at rajendradatacenter.com/flanges/en-1092-1/

Dimension	mm	in
d1 Collar outside diameter	212	8.35
F36 Collar thickness	5	0.20
H4 Overall length	55	2.17
A Neck outside diameter (pipe OD)	168.3	6.63
S Neck wall thickness (min)	5	0.20
B Bore, A - 2S	158.3	6.23

RAJENDRA INDUSTRIAL CORPORATION
rajendradatacenter.com
Drawing RIC-EN1092-36-PN16-DN150
Scale 1:2.5 on A4
Units: mm (inches)
Date 2026-11-22
Quote: rajendradatacenter.com/rfq/
sales@rajendradatacenter.com
+91 74338 71355