**Approx. weight**

| Material | kg | lb |
|---|---|---|
| Carbon steel | 0.0 | 0.1 |
| Stainless steel 304 and 304L | 0.0 | 0.1 |
| Stainless steel 316 and 316L | 0.0 | 0.1 |

Densities 7.85, 7.9 and 8.0 g/cm3.
Calculated from the dimensions as the standard gives them, with no allowance for tolerance.

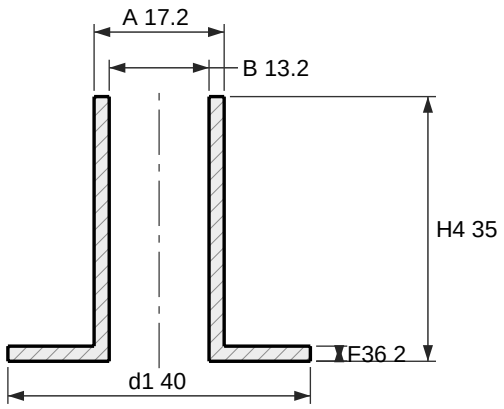

Section

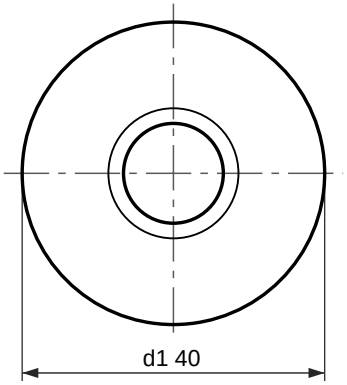

Face view

# Pressed collar with long neck, EN 1092-1 type 36, PN 16

DN 10, neck 17.2 × 2

Designation: Collar EN 1092-1/36/DN 10/PN 16
Dimensions per EN 1092-1:2018, Table 13 (PN 16) and Table 8 (facing) and Annex A (wall thickness); tolerances per EN 1092-1.
Collar for a type 02 loose plate flange, which bolts over it. d1 is the lap diameter and the joint face.
5.7.2.1 does not ask for a machined jointing face on this type.
EN 1092-1 gives PN 16 the same dimensions as PN 10 in DN 10; only the marking differs.
Reference drawing. The purchase order and EN 1092-1 govern.
Generated at rajendradatacenter.com/flanges/en-1092-1/

| Dimension | mm | in |
|---|---|---|
| d1 Collar outside diameter | 40 | 1.57 |
| F36 Collar thickness | 2 | 0.08 |
| H4 Overall length | 35 | 1.38 |
| A Neck outside diameter (pipe OD) | 17.2 | 0.68 |
| S Neck wall thickness (min) | 2 | 0.08 |
| B Bore, A - 2S | 13.2 | 0.52 |

RAJENDRA INDUSTRIAL CORPORATION
rajendradatacenter.com
Drawing RIC-EN1092-36-PN16-DN10
Scale 1:1 on A4
Units: mm (inches)
Date 2026-11-22
Quote: rajendradatacenter.com/rfq/
sales@rajendradatacenter.com
+91 74338 71355