**Approx. weight**

| Material | kg | lb |
|---|---|---|
| Carbon steel | 2.4 | 5.2 |
| Stainless steel 304 and 304L | 2.4 | 5.3 |
| Stainless steel 316 and 316L | 2.4 | 5.3 |

Densities 7.85, 7.9 and 8.0 g/cm3.
Calculated from the dimensions as the standard gives them, with no allowance for tolerance.

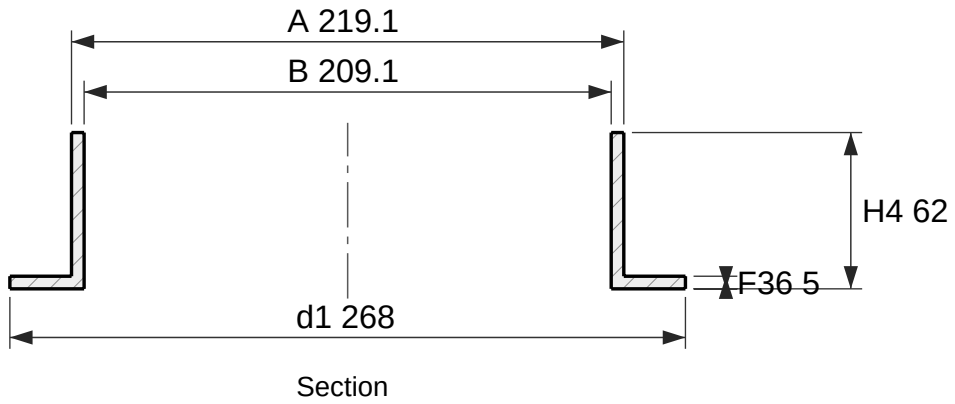


Section

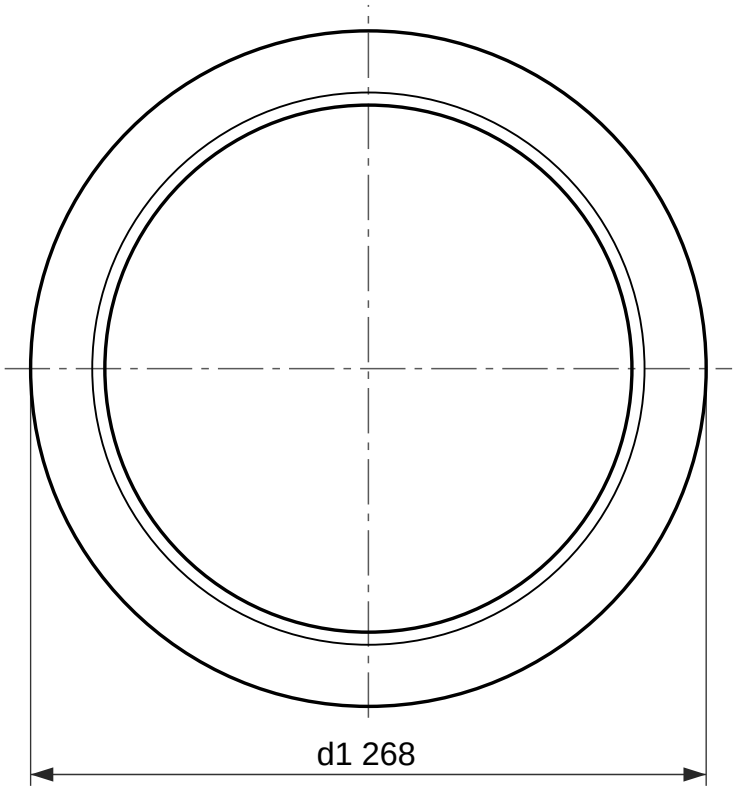


Face view

# Pressed collar with long neck, EN 1092-1 type 36, PN 10

DN 200, neck 219.1 × 5

Designation: Collar EN 1092-1/36/DN 200/PN 10
Dimensions per EN 1092-1:2018, Table 12 (PN 10) and Table 8 (facing) and Annex A (wall thickness); tolerances per EN 1092-1.
Collar for a type 02 loose plate flange, which bolts over it. d1 is the lap diameter and the joint face.
5.7.2.1 does not ask for a machined jointing face on this type.
Reference drawing. The purchase order and EN 1092-1 govern.
Generated at rajendradatacenter.com/flanges/en-1092-1/

| Dimension | mm | in |
|---|---|---|
| d1 Collar outside diameter | 268 | 10.55 |
| F36 Collar thickness | 5 | 0.20 |
| H4 Overall length | 62 | 2.44 |
| A Neck outside diameter (pipe OD) | 219.1 | 8.63 |
| S Neck wall thickness (min) | 5 | 0.20 |
| B Bore, A - 2S | 209.1 | 8.23 |

RAJENDRA INDUSTRIAL CORPORATION
rajendradatacenter.com
Drawing RIC-EN1092-36-PN10-DN200
Scale 1:3 on A4
Units: mm (inches)
Date 2026-11-22
Quote: rajendradatacenter.com/rfq/
sales@rajendradatacenter.com
+91 74338 71355