Approx. weight

Material	kg	lb
Carbon steel	0.0	0.1
Stainless steel 304 and 304L	0.0	0.1
Stainless steel 316 and 316L	0.0	0.1

Densities 7.85, 7.9 and 8.0 g/cm3.
Calculated from the dimensions as the standard gives them, with no allowance for tolerance.

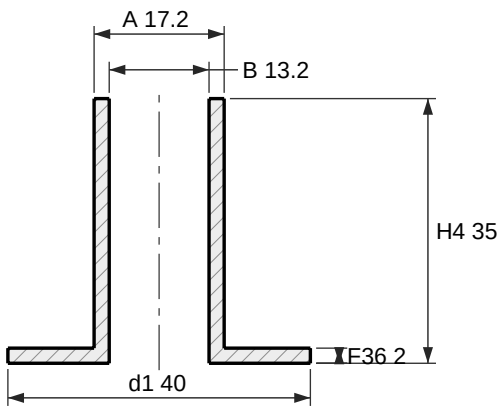

Section

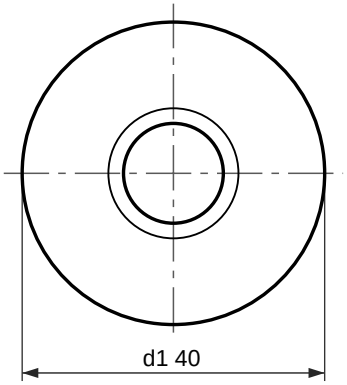

Face view

Pressed collar with long neck, EN 1092-1 type 36, PN 10

DN 10, neck 17.2 × 2

Designation: Collar EN 1092-1/36/DN 10/PN 10
Dimensions per EN 1092-1:2018, Table 12 (PN 10) and Table 8 (facing) and Annex A (wall thickness); tolerances per EN 1092-1.
Collar for a type 02 loose plate flange, which bolts over it. d1 is the lap diameter and the joint face.
5.7.2.1 does not ask for a machined jointing face on this type.
EN 1092-1 gives PN 10 the same dimensions as PN 16 in DN 10; only the marking differs.
Reference drawing. The purchase order and EN 1092-1 govern.
Generated at rajendradatacenter.com/flanges/en-1092-1/

Dimension	mm	in
d1 Collar outside diameter	40	1.57
F36 Collar thickness	2	0.08
H4 Overall length	35	1.38
A Neck outside diameter (pipe OD)	17.2	0.68
S Neck wall thickness (min)	2	0.08
B Bore, A - 2S	13.2	0.52

RAJENDRA INDUSTRIAL CORPORATION
rajendradatacenter.com
Drawing RIC-EN1092-36-PN10-DN10
Scale 1:1 on A4
Units: mm (inches)
Date 2026-11-22
Quote: rajendradatacenter.com/rfq/
sales@rajendradatacenter.com
+91 74338 71355