Approx. weight

Material	kg	lb
Carbon steel	20.5	45.2
Stainless steel 304 and 304L	20.6	45.4
Stainless steel 316 and 316L	20.9	46.0

Densities 7.85, 7.9 and 8.0 g/cm3.
Calculated from the dimensions as the standard gives them, with no allowance for tolerance.

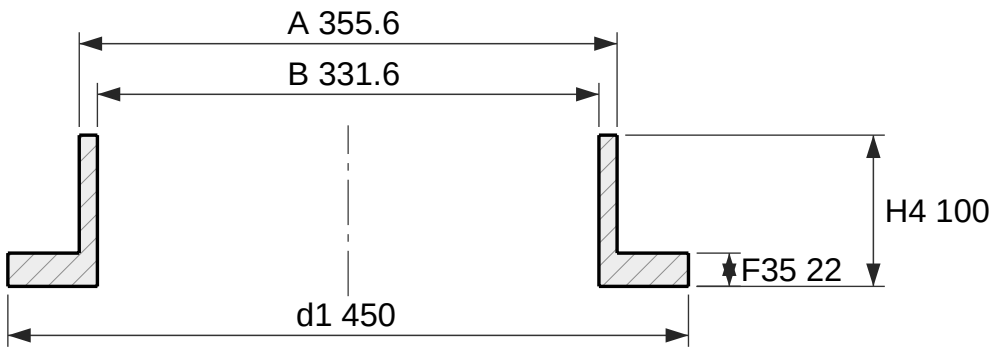

Section

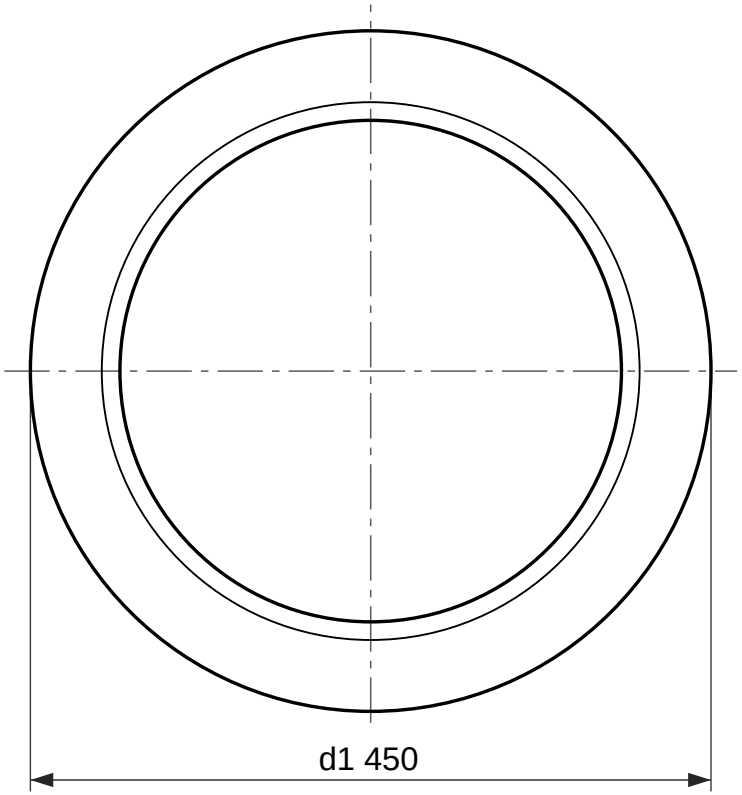

Face view

Weldring neck, EN 1092-1 type 35, PN 25

DN 350, facing type A (flat face), neck 355.6 × 12

Designation: Collar EN 1092-1/35/A/DN 350/PN 25
Dimensions per EN 1092-1:2018, Table 14 (PN 25) and Table 8 (facing) and Annex A (wall thickness); tolerances per EN 1092-1.
Facing type A (flat face), as 5.7.2.3 gives this type unless the order says otherwise.
Collar for a type 02 loose plate flange, which bolts over it. d1 is the lap diameter and the joint face.
Reference drawing. The purchase order and EN 1092-1 govern.
Generated at rajendradatacenter.com/flanges/en-1092-1/

Dimension	mm	in
d1 Collar outside diameter	450	17.72
F35 Collar thickness	22	0.87
H4 Overall length	100	3.94
A Neck outside diameter (pipe OD)	355.6	14.00
S Neck wall thickness (min)	12	0.47
B Bore, A - 2S	331.6	13.06

RAJENDRA INDUSTRIAL CORPORATION
rajendradatacenter.com
Drawing RIC-EN1092-35-PN25-DN350-A
Scale 1:5 on A4
Units: mm (inches)
Date 2026-11-22
Quote: rajendradatacenter.com/rfq/
sales@rajendradatacenter.com
+91 74338 71355