Approx. weight

Material	kg	lb
Carbon steel	13.3	29.3
Stainless steel 304 and 304L	13.4	29.5
Stainless steel 316 and 316L	13.5	29.8

Densities 7.85, 7.9 and 8.0 g/cm3.
Calculated from the dimensions as the standard gives them, with no allowance for tolerance.

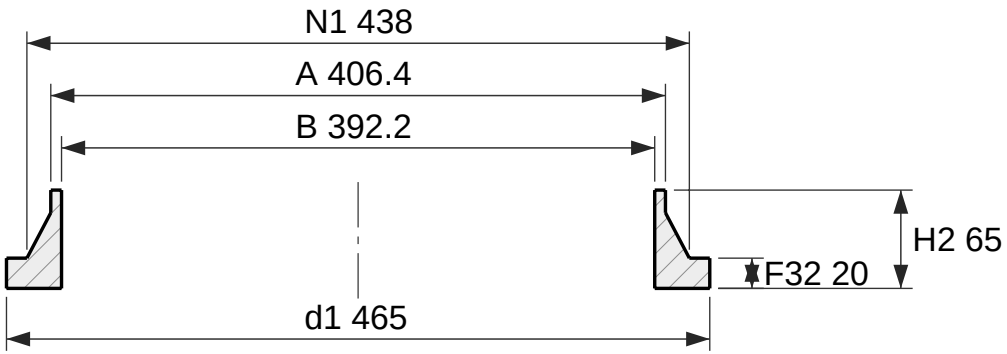

Section

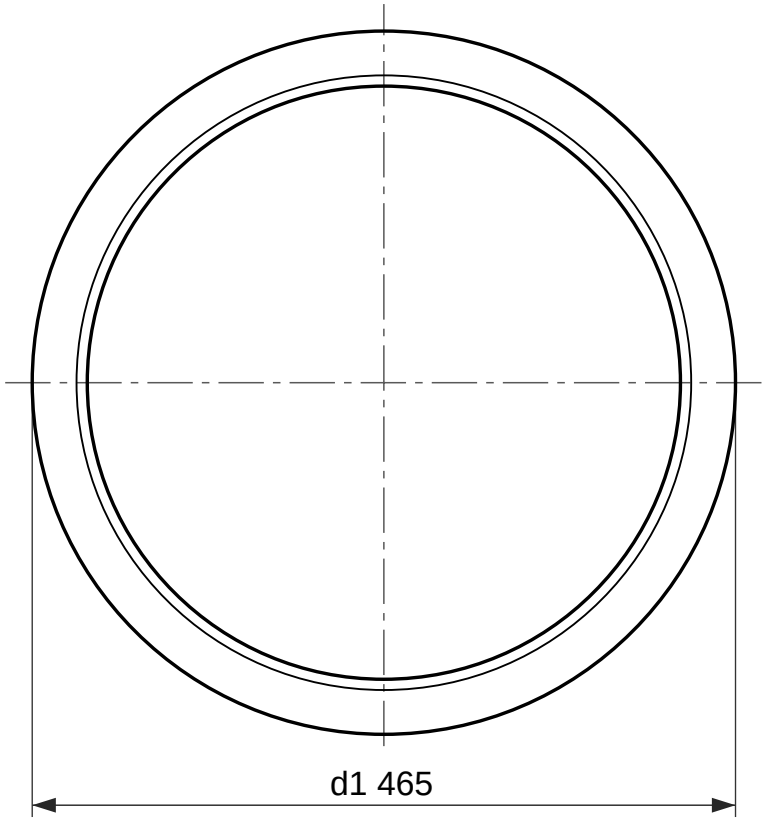

Face view

Weld-neck collar, EN 1092-1 type 34, PN 6

DN 400, facing type A (flat face), neck 406.4 × 7.1

Designation: Collar EN 1092-1/34/A/DN 400/PN 6
Dimensions per EN 1092-1:2018, Table 11 (PN 6) and Table 8 (facing) and Annex A (wall thickness); tolerances per EN 1092-1.
Facing type A (flat face), as 5.7.2.3 gives this type unless the order says otherwise.
S is the minimum neck wall, from Annex A Table A.1; drawn at 7.1 mm. State the pipe wall in the order (for example DN 400 × 7.1).
Collar for a type 04 loose plate flange, which bolts over it. d1 is the lap diameter and the joint face.
Reference drawing. The purchase order and EN 1092-1 govern.
Generated at rajendradatacenter.com/flanges/en-1092-1/

Dimension	mm	in
d1 Collar outside diameter	465	18.31
F32 Collar thickness	20	0.79
H2 Length through hub	65	2.56
N1 Hub diameter at back face	438	17.24
A Neck outside diameter (pipe OD)	406.4	16.00
S Neck wall thickness (min)	7.1	0.28
B Bore, A - 2S	392.2	15.44

RAJENDRA INDUSTRIAL CORPORATION
rajendradatacenter.com
Drawing RIC-EN1092-34-PN6-DN400-A
Scale 1:5 on A4
Units: mm (inches)
Date 2026-11-22
Quote: rajendradatacenter.com/rfq/
sales@rajendradatacenter.com
+91 74338 71355