**Approx. weight**

| Material | kg | lb |
|---|---|---|
| Carbon steel | 2.0 | 4.5 |
| Stainless steel 304 and 304L | 2.0 | 4.5 |
| Stainless steel 316 and 316L | 2.1 | 4.5 |

Densities 7.85, 7.9 and 8.0 g/cm3.
Calculated from the dimensions as the standard gives them, with no allowance for tolerance.

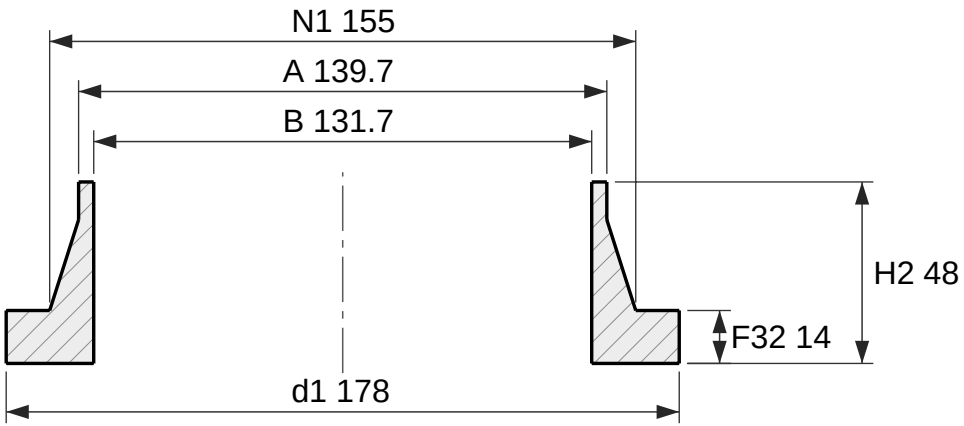


Section

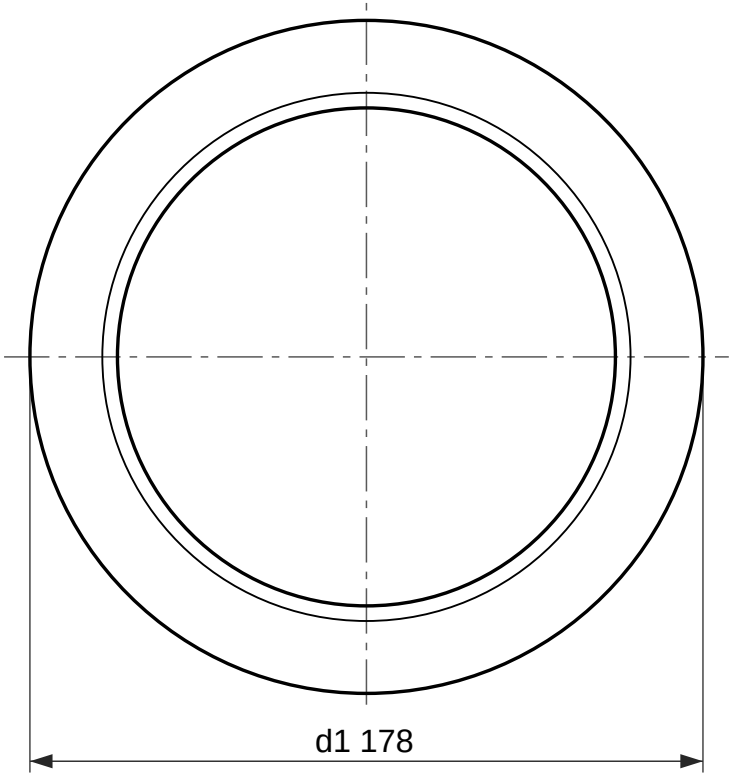


Face view

# Weld-neck collar, EN 1092-1 type 34, PN 6

DN 125, facing type A (flat face), neck 139.7 × 4

Designation: Collar EN 1092-1/34/A/DN 125/PN 6
Dimensions per EN 1092-1:2018, Table 11 (PN 6) and Table 8 (facing) and Annex A (wall thickness); tolerances per EN 1092-1.
Facing type A (flat face), as 5.7.2.3 gives this type unless the order says otherwise.
S is the minimum neck wall, from Annex A Table A.1; drawn at 4 mm. State the pipe wall in the order (for example DN 125 × 4).
Collar for a type 04 loose plate flange, which bolts over it. d1 is the lap diameter and the joint face.
Reference drawing. The purchase order and EN 1092-1 govern.
Generated at rajendradatacenter.com/flanges/en-1092-1/

| Dimension | mm | in |
|---|---|---|
| d1 Collar outside diameter | 178 | 7.01 |
| F32 Collar thickness | 14 | 0.55 |
| H2 Length through hub | 48 | 1.89 |
| N1 Hub diameter at back face | 155 | 6.10 |
| A Neck outside diameter (pipe OD) | 139.7 | 5.50 |
| S Neck wall thickness (min) | 4 | 0.16 |
| B Bore, A - 2S | 131.7 | 5.19 |

RAJENDRA INDUSTRIAL CORPORATION
rajendradatacenter.com
Drawing RIC-EN1092-34-PN6-DN125-A
Scale 1:2 on A4
Units: mm (inches)
Date 2026-11-22
Quote: rajendradatacenter.com/rfq/
sales@rajendradatacenter.com
+91 74338 71355