**Approx. weight**

| Material | kg | lb |
|---|---|---|
| Carbon steel | 0.7 | 1.6 |
| Stainless steel 304 and 304L | 0.7 | 1.6 |
| Stainless steel 316 and 316L | 0.7 | 1.6 |

Densities 7.85, 7.9 and 8.0 g/cm3.
Calculated from the dimensions as the standard gives them, with no allowance for tolerance.

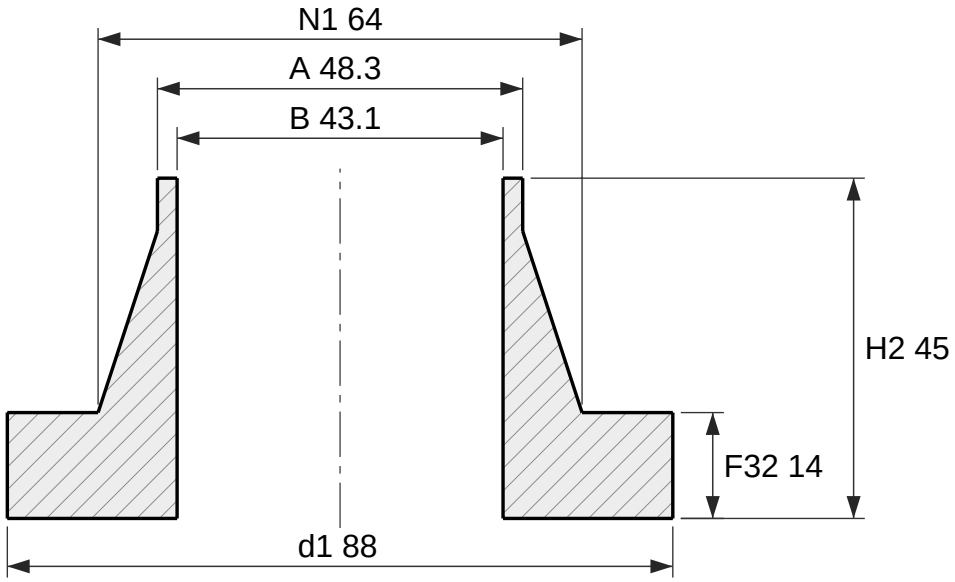


Section

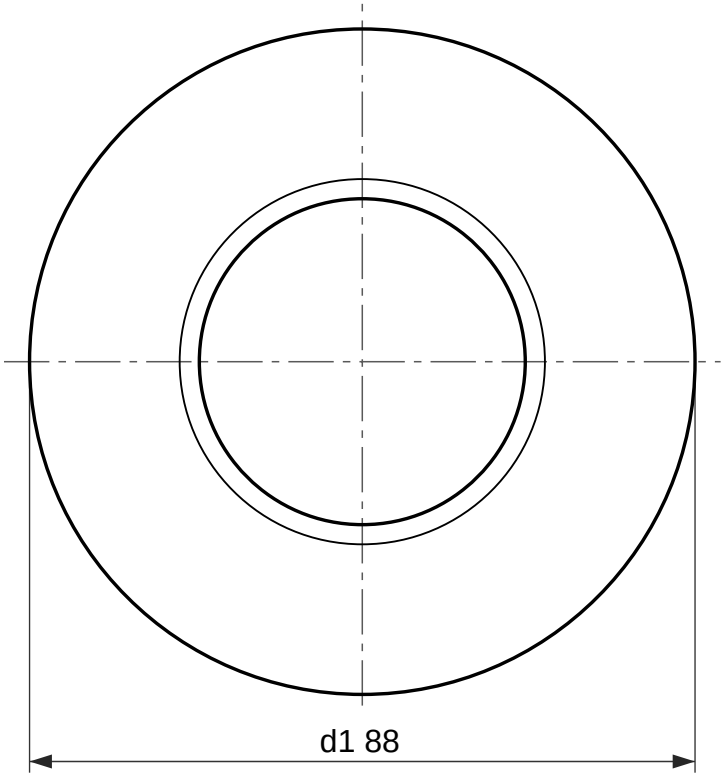


Face view

# Weld-neck collar, EN 1092-1 type 34, PN 40

DN 40, facing type A (flat face), neck 48.3 × 2.6

Designation: Collar EN 1092-1/34/A/DN 40/PN 40
Dimensions per EN 1092-1:2018, Table 15 (PN 40) and Table 8 (facing) and Annex A (wall thickness); tolerances per EN 1092-1.
Facing type A (flat face), as 5.7.2.3 gives this type unless the order says otherwise.
S is the minimum neck wall, from Annex A Table A.1; drawn at 2.6 mm. State the pipe wall in the order (for example DN 40 × 2.6).
Collar for a type 04 loose plate flange, which bolts over it. d1 is the lap diameter and the joint face.
EN 1092-1 gives PN 40 the same dimensions as PN 10, PN 16, PN 25 in DN 40; only the marking differs.
Reference drawing. The purchase order and EN 1092-1 govern.
Generated at rajendradatacenter.com/flanges/en-1092-1/

| Dimension | mm | in |
|---|---|---|
| d1 Collar outside diameter | 88 | 3.46 |
| F32 Collar thickness | 14 | 0.55 |
| H2 Length through hub | 45 | 1.77 |
| N1 Hub diameter at back face | 64 | 2.52 |
| A Neck outside diameter (pipe OD) | 48.3 | 1.90 |
| S Neck wall thickness (min) | 2.6 | 0.10 |
| B Bore, A - 2S | 43.1 | 1.70 |

RAJENDRA INDUSTRIAL CORPORATION
rajendradatacenter.com
Drawing RIC-EN1092-34-PN40-DN40-A
Scale 1:1 on A4
Units: mm (inches)
Date 2026-11-22
Quote: rajendradatacenter.com/rfq/
sales@rajendradatacenter.com
+91 74338 71355