Approx. weight

Material	kg	lb
Carbon steel	71.7	158
Stainless steel 304 and 304L	72.1	159
Stainless steel 316 and 316L	73.0	161

Densities 7.85, 7.9 and 8.0 g/cm3.
Calculated from the dimensions as the standard gives them, with no allowance for tolerance.

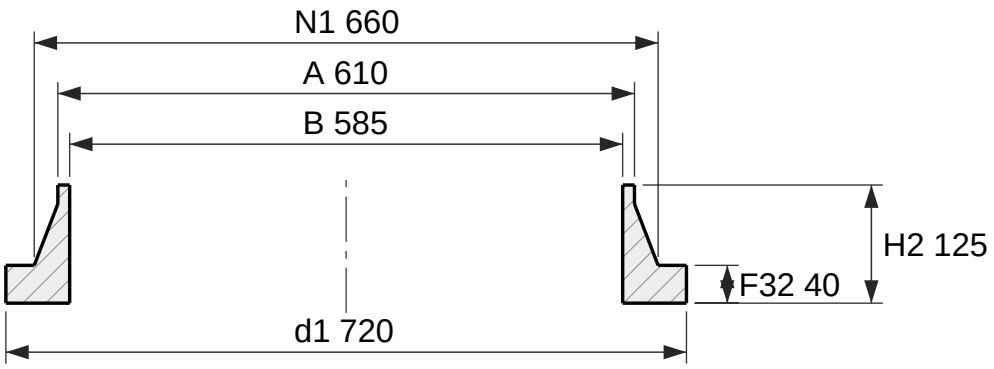

Section

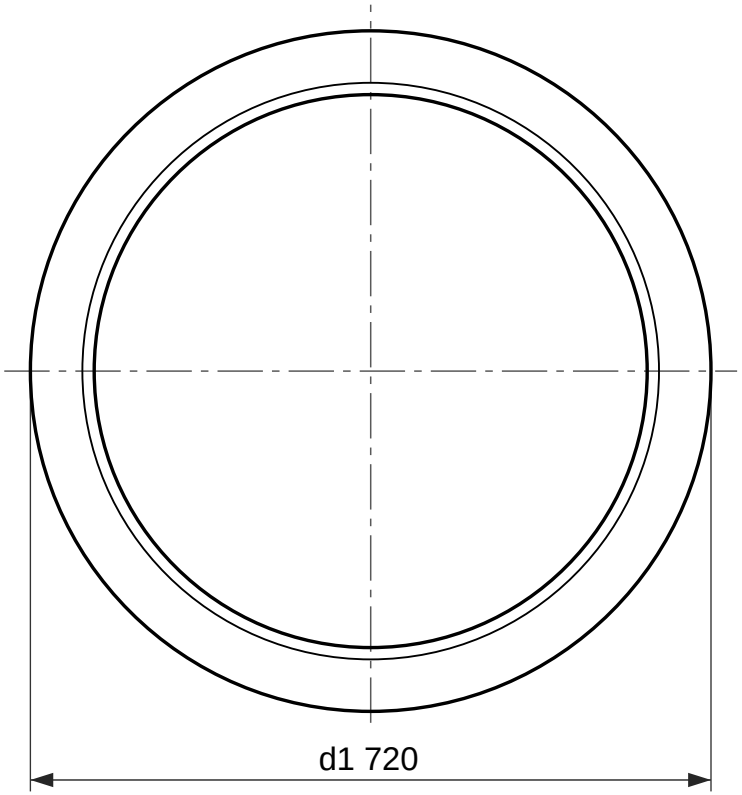

Face view

Weld-neck collar, EN 1092-1 type 34, PN 25

DN 600, facing type A (flat face), neck 610 × 12.5

Designation: Collar EN 1092-1/34/A/DN 600/PN 25
Dimensions per EN 1092-1:2018, Table 14 (PN 25) and Table 8 (facing) and Annex A (wall thickness); tolerances per EN 1092-1.
Facing type A (flat face), as 5.7.2.3 gives this type unless the order says otherwise.
S is the minimum neck wall, from Annex A Table A.1; drawn at 12.5 mm. State the pipe wall in the order (for example DN 600 × 12.5).
Collar for a type 04 loose plate flange, which bolts over it. d1 is the lap diameter and the joint face.
Reference drawing. The purchase order and EN 1092-1 govern.
Generated at rajendradatacenter.com/flanges/en-1092-1/

Dimension	mm	in
d1 Collar outside diameter	720	28.35
F32 Collar thickness	40	1.57
H2 Length through hub	125	4.92
N1 Hub diameter at back face	660	25.98
A Neck outside diameter (pipe OD)	610	24.02
S Neck wall thickness (min)	12.5	0.49
B Bore, A - 2S	585	23.03

RAJENDRA INDUSTRIAL CORPORATION
rajendradatacenter.com
Drawing RIC-EN1092-34-PN25-DN600-A
Scale 1:8 on A4
Units: mm (inches)
Date 2026-11-22
Quote: rajendradatacenter.com/rfq/
sales@rajendradatacenter.com
+91 74338 71355