Approx. weight

Material	kg	lb
Carbon steel	12.0	26.6
Stainless steel 304 and 304L	12.1	26.7
Stainless steel 316 and 316L	12.3	27.1

Densities 7.85, 7.9 and 8.0 g/cm3.
Calculated from the dimensions as the standard gives them, with no allowance for tolerance.

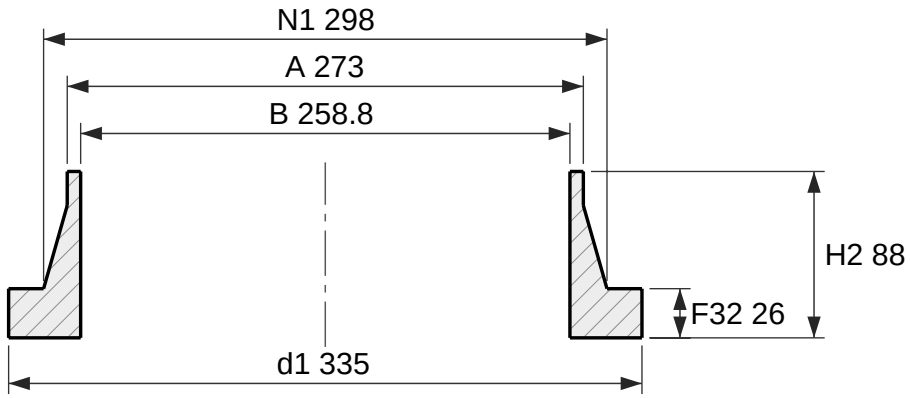

Section

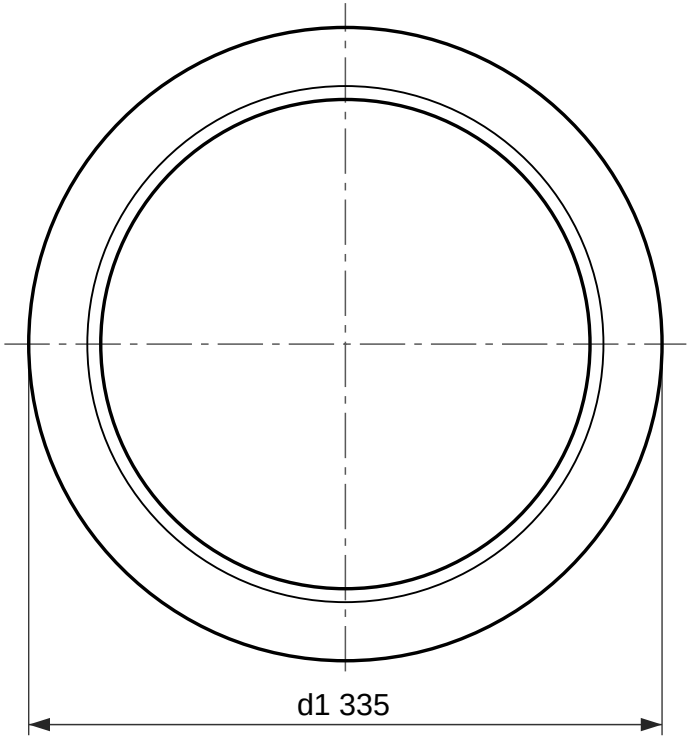

Face view

Weld-neck collar, EN 1092-1 type 34, PN 25

DN 250, facing type A (flat face), neck 273 × 7.1

Designation: Collar EN 1092-1/34/A/DN 250/PN 25
Dimensions per EN 1092-1:2018, Table 14 (PN 25) and Table 8 (facing) and Annex A (wall thickness); tolerances per EN 1092-1.
Facing type A (flat face), as 5.7.2.3 gives this type unless the order says otherwise.
S is the minimum neck wall, from Annex A Table A.1; drawn at 7.1 mm. State the pipe wall in the order (for example DN 250 × 7.1).
Collar for a type 04 loose plate flange, which bolts over it. d1 is the lap diameter and the joint face.
Reference drawing. The purchase order and EN 1092-1 govern.
Generated at rajendradatacenter.com/flanges/en-1092-1/

Dimension	mm	in
d1 Collar outside diameter	335	13.19
F32 Collar thickness	26	1.02
H2 Length through hub	88	3.46
N1 Hub diameter at back face	298	11.73
A Neck outside diameter (pipe OD)	273	10.75
S Neck wall thickness (min)	7.1	0.28
B Bore, A - 2S	258.8	10.19

RAJENDRA INDUSTRIAL CORPORATION
rajendradatacenter.com
Drawing RIC-EN1092-34-PN25-DN250-A
Scale 1:4 on A4
Units: mm (inches)
Date 2026-11-22
Quote: rajendradatacenter.com/rfq/
sales@rajendradatacenter.com
+91 74338 71355