Approx. weight

Material	kg	lb
Carbon steel	3.7	8.3
Stainless steel 304 and 304L	3.8	8.3
Stainless steel 316 and 316L	3.8	8.4

Densities 7.85, 7.9 and 8.0 g/cm3.
Calculated from the dimensions as the standard gives them, with no allowance for tolerance.

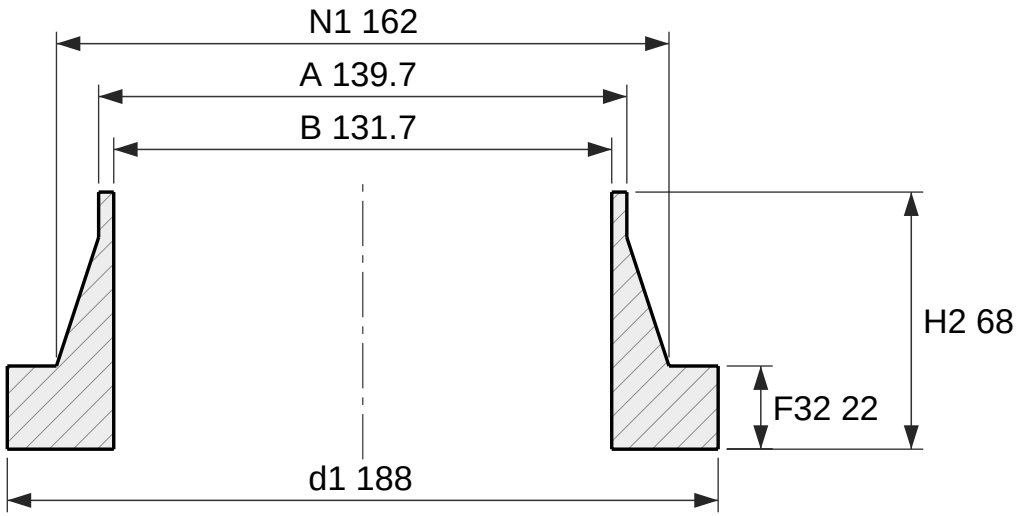

Section

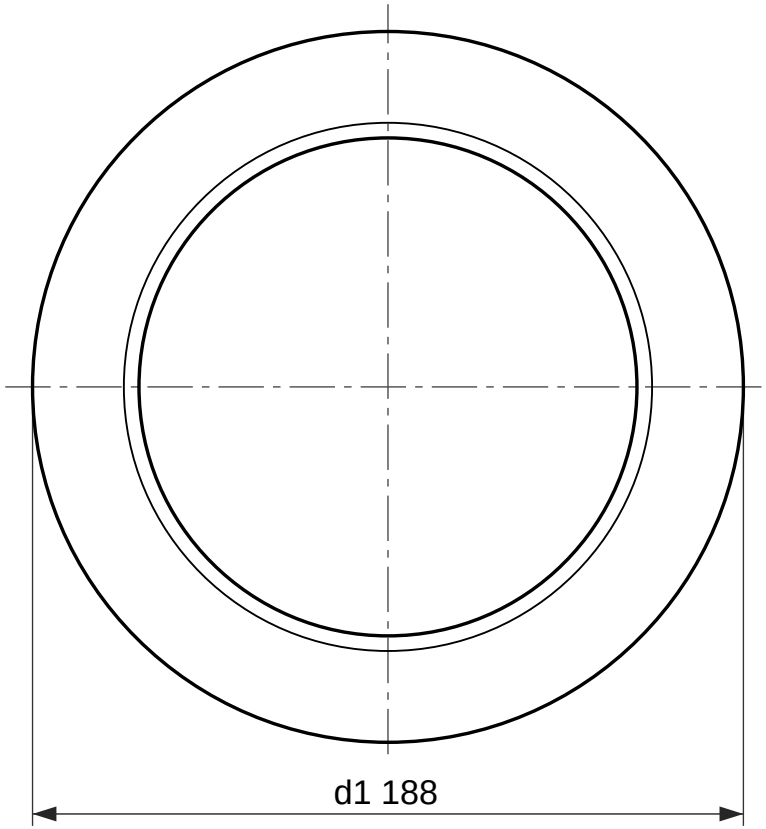

Face view

Weld-neck collar, EN 1092-1 type 34, PN 25

DN 125, facing type A (flat face), neck 139.7 × 4

Designation: Collar EN 1092-1/34/A/DN 125/PN 25
Dimensions per EN 1092-1:2018, Table 14 (PN 25) and Table 8 (facing) and Annex A (wall thickness); tolerances per EN 1092-1.
Facing type A (flat face), as 5.7.2.3 gives this type unless the order says otherwise.
S is the minimum neck wall, from Annex A Table A.1; drawn at 4 mm. State the pipe wall in the order (for example DN 125 × 4).
Collar for a type 04 loose plate flange, which bolts over it. d1 is the lap diameter and the joint face.
EN 1092-1 gives PN 25 the same dimensions as PN 40 in DN 125; only the marking differs.
Reference drawing. The purchase order and EN 1092-1 govern.
Generated at rajendradatacenter.com/flanges/en-1092-1/

Dimension	mm	in
d1 Collar outside diameter	188	7.40
F32 Collar thickness	22	0.87
H2 Length through hub	68	2.68
N1 Hub diameter at back face	162	6.38
A Neck outside diameter (pipe OD)	139.7	5.50
S Neck wall thickness (min)	4	0.16
B Bore, A - 2S	131.7	5.19

RAJENDRA INDUSTRIAL CORPORATION
rajendradatacenter.com
Drawing RIC-EN1092-34-PN25-DN125-A
Scale 1:2 on A4
Units: mm (inches)
Date 2026-11-22
Quote: rajendradatacenter.com/rfq/
sales@rajendradatacenter.com
+91 74338 71355