Approx. weight

Material	kg	lb
Carbon steel	0.7	1.6
Stainless steel 304 and 304L	0.7	1.6
Stainless steel 316 and 316L	0.7	1.6

Densities 7.85, 7.9 and 8.0 g/cm3.
Calculated from the dimensions as the standard gives them, with no allowance for tolerance.

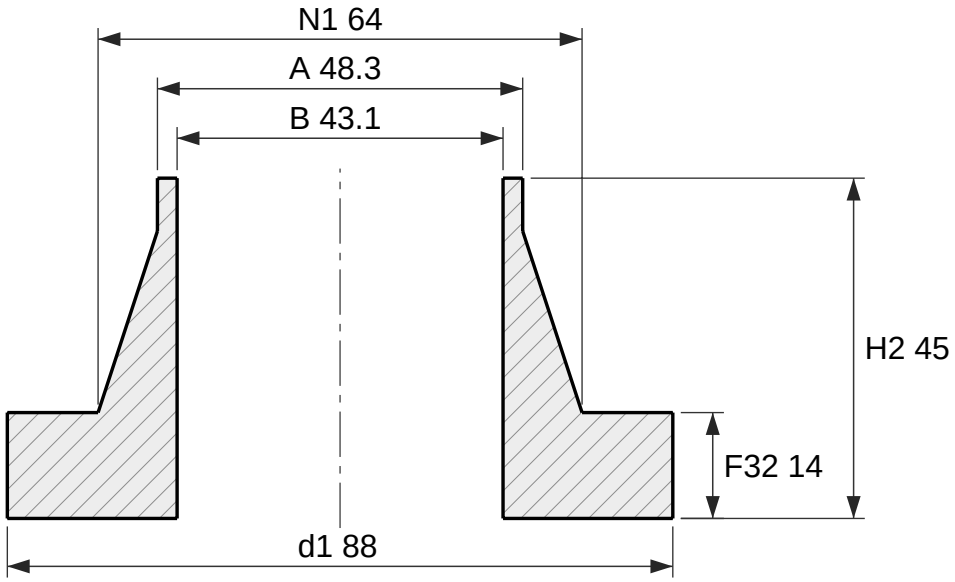

Section

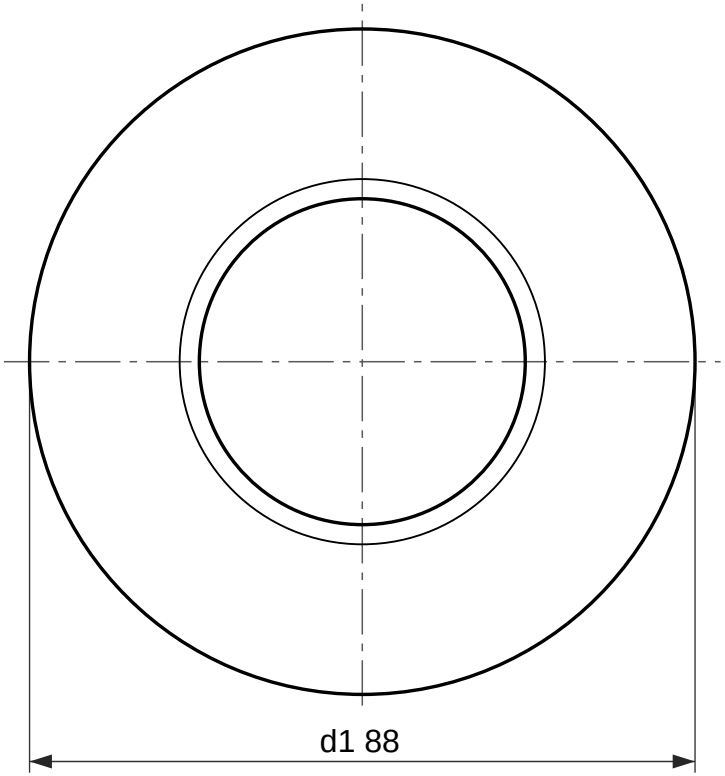

Face view

Weld-neck collar, EN 1092-1 type 34, PN 10

DN 40, facing type A (flat face), neck 48.3 × 2.6

Designation: Collar EN 1092-1/34/A/DN 40/PN 10
Dimensions per EN 1092-1:2018, Table 12 (PN 10) and Table 8 (facing) and Annex A (wall thickness); tolerances per EN 1092-1.
Facing type A (flat face), as 5.7.2.3 gives this type unless the order says otherwise.
S is the minimum neck wall, from Annex A Table A.1; drawn at 2.6 mm. State the pipe wall in the order (for example DN 40 × 2.6).
Collar for a type 04 loose plate flange, which bolts over it. d1 is the lap diameter and the joint face.
EN 1092-1 gives PN 10 the same dimensions as PN 16, PN 25, PN 40 in DN 40; only the marking differs.
Reference drawing. The purchase order and EN 1092-1 govern.
Generated at rajendradatacenter.com/flanges/en-1092-1/

Dimension	mm	in
d1 Collar outside diameter	88	3.46
F32 Collar thickness	14	0.55
H2 Length through hub	45	1.77
N1 Hub diameter at back face	64	2.52
A Neck outside diameter (pipe OD)	48.3	1.90
S Neck wall thickness (min)	2.6	0.10
B Bore, A - 2S	43.1	1.70

RAJENDRA INDUSTRIAL CORPORATION
rajendradatacenter.com
Drawing RIC-EN1092-34-PN10-DN40-A
Scale 1:1 on A4
Units: mm (inches)
Date 2026-11-22
Quote: rajendradatacenter.com/rfq/
sales@rajendradatacenter.com
+91 74338 71355