**Approx. weight**

| Material | kg | lb |
|---|---|---|
| Carbon steel | 3.4 | 7.6 |
| Stainless steel 304 and 304L | 3.5 | 7.6 |
| Stainless steel 316 and 316L | 3.5 | 7.7 |

Densities 7.85, 7.9 and 8.0 g/cm3.
Calculated from the dimensions as the standard gives them, with no allowance for tolerance.

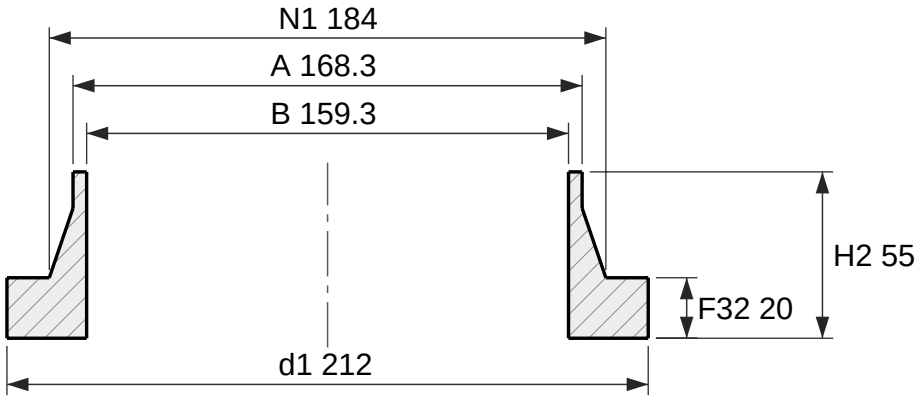


Section

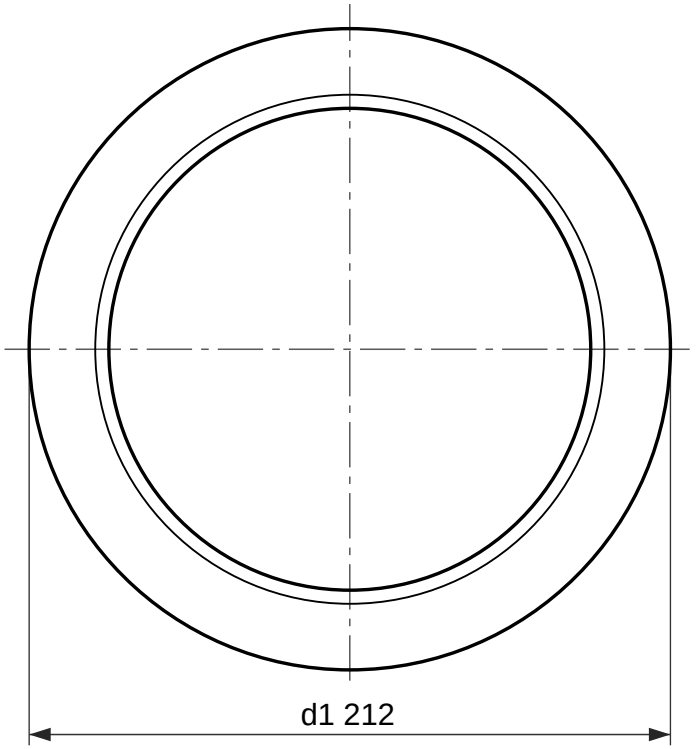


Face view

# Weld-neck collar, EN 1092-1 type 34, PN 10

DN 150, facing type A (flat face), neck 168.3 × 4.5

Designation: Collar EN 1092-1/34/A/DN 150/PN 10
Dimensions per EN 1092-1:2018, Table 12 (PN 10) and Table 8 (facing) and Annex A (wall thickness); tolerances per EN 1092-1.
Facing type A (flat face), as 5.7.2.3 gives this type unless the order says otherwise.
S is the minimum neck wall, from Annex A Table A.1; drawn at 4.5 mm. State the pipe wall in the order (for example DN 150 × 4.5).
Collar for a type 04 loose plate flange, which bolts over it. d1 is the lap diameter and the joint face.
EN 1092-1 gives PN 10 the same dimensions as PN 16 in DN 150; only the marking differs.
Reference drawing. The purchase order and EN 1092-1 govern.
Generated at rajendradatacenter.com/flanges/en-1092-1/

| Dimension | mm | in |
|---|---|---|
| d1 Collar outside diameter | 212 | 8.35 |
| F32 Collar thickness | 20 | 0.79 |
| H2 Length through hub | 55 | 2.17 |
| N1 Hub diameter at back face | 184 | 7.24 |
| A Neck outside diameter (pipe OD) | 168.3 | 6.63 |
| S Neck wall thickness (min) | 4.5 | 0.18 |
| B Bore, A - 2S | 159.3 | 6.27 |

RAJENDRA INDUSTRIAL CORPORATION
rajendradatacenter.com
Drawing RIC-EN1092-34-PN10-DN150-A
Scale 1:2.5 on A4
Units: mm (inches)
Date 2026-11-22
Quote: rajendradatacenter.com/rfq/
sales@rajendradatacenter.com
+91 74338 71355