Approx. weight

Material	kg	lb
Carbon steel	2.1	4.6
Stainless steel 304 and 304L	2.1	4.6
Stainless steel 316 and 316L	2.1	4.7

Densities 7.85, 7.9 and 8.0 g/cm3.
Calculated from the dimensions as the standard gives them, with no allowance for tolerance.

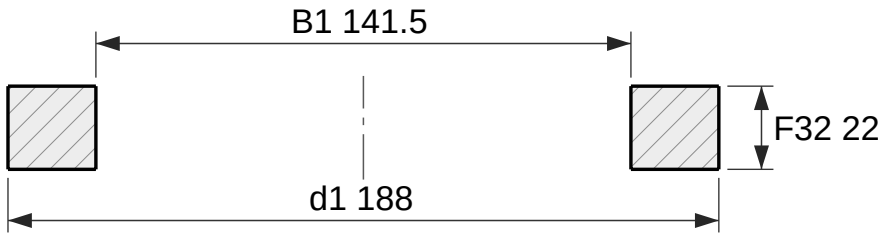

Section

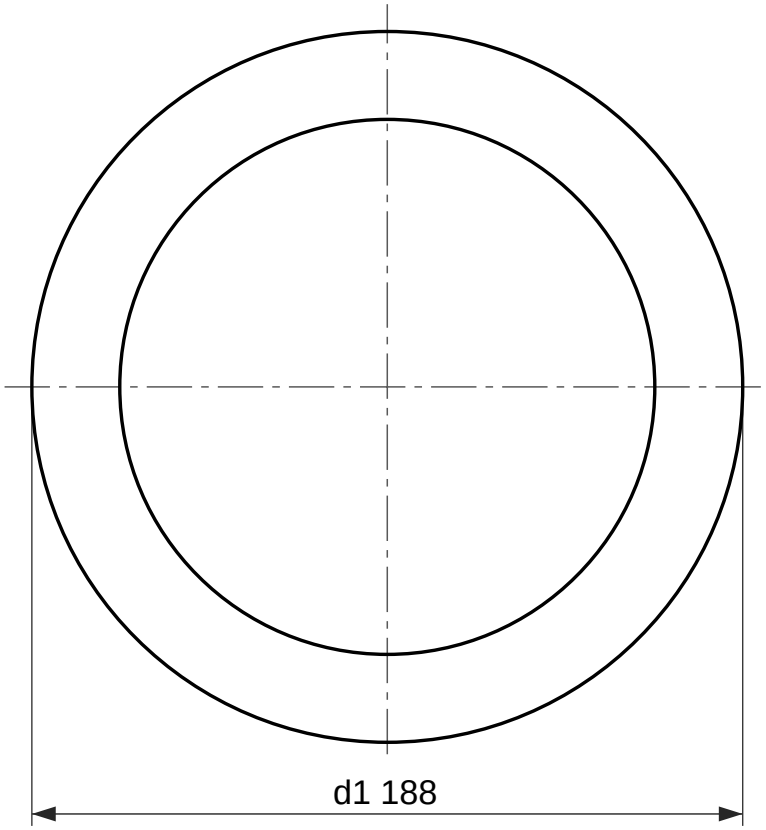

Face view

Weld-on plate collar, EN 1092-1 type 32, PN 40

DN 125, facing type A (flat face)

Designation: Collar EN 1092-1/32/A/DN 125/PN 40
Dimensions per EN 1092-1:2018, Table 15 (PN 40) and Table 8 (facing); tolerances per EN 1092-1.
Facing type A (flat face), as 5.7.2.3 gives this type unless the order says otherwise.
Collar for a type 02 loose plate flange, which bolts over it. d1 is the lap diameter and the joint face.
EN 1092-1 gives PN 40 the same dimensions as PN 25 in DN 125; only the marking differs.
Reference drawing. The purchase order and EN 1092-1 govern.
Generated at rajendradatacenter.com/flanges/en-1092-1/

Dimension	mm	in
d1 Collar outside diameter	188	7.40
F32 Collar thickness	22	0.87
B1 Bore	141.5	5.57

RAJENDRA INDUSTRIAL CORPORATION
rajendradatacenter.com
Drawing RIC-EN1092-32-PN40-DN125-A
Scale 1:2 on A4
Units: mm (inches)
Date 2026-11-22
Quote: rajendradatacenter.com/rfq/
sales@rajendradatacenter.com
+91 74338 71355