**Approx. weight**

| Material | kg | lb |
|---|---|---|
| Carbon steel | 4.0 | 8.9 |
| Stainless steel 304 and 304L | 4.0 | 8.9 |
| Stainless steel 316 and 316L | 4.1 | 9.0 |

Densities 7.85, 7.9 and 8.0 g/cm3.
Calculated from the dimensions as the standard gives them, with no allowance for tolerance.

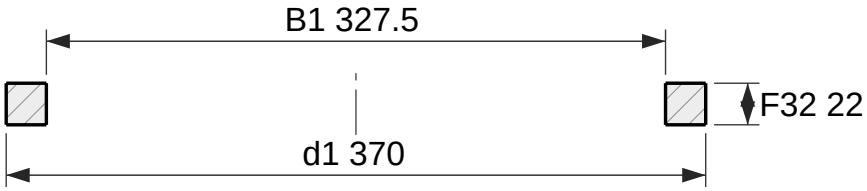


Section

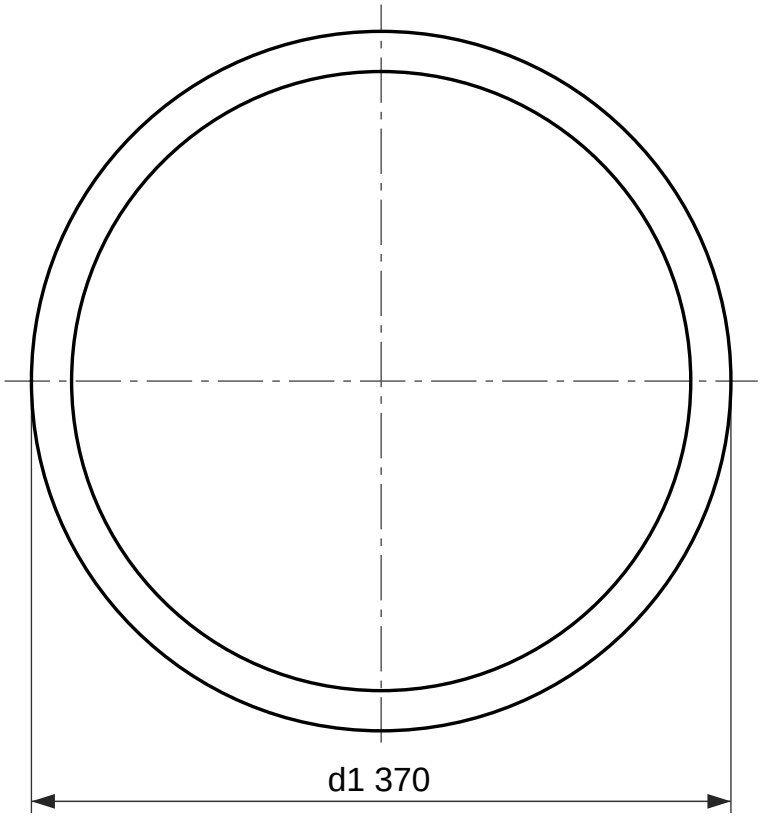


Face view

# Weld-on plate collar, EN 1092-1 type 32, PN 10

DN 300, facing type A (flat face)

Designation: Collar EN 1092-1/32/A/DN 300/PN 10
Dimensions per EN 1092-1:2018, Table 12 (PN 10) and Table 8 (facing); tolerances per EN 1092-1.
Facing type A (flat face), as 5.7.2.3 gives this type unless the order says otherwise.
Collar for a type 02 loose plate flange, which bolts over it. d1 is the lap diameter and the joint face.
Reference drawing. The purchase order and EN 1092-1 govern.
Generated at rajendradatacenter.com/flanges/en-1092-1/

| Dimension | mm | in |
|---|---|---|
| d1 Collar outside diameter | 370 | 14.57 |
| F32 Collar thickness | 22 | 0.87 |
| B1 Bore | 327.5 | 12.89 |

RAJENDRA INDUSTRIAL CORPORATION
rajendradatacenter.com
Drawing RIC-EN1092-32-PN10-DN300-A
Scale 1:4 on A4
Units: mm (inches)
Date 2026-11-22
Quote: rajendradatacenter.com/rfq/
sales@rajendradatacenter.com
+91 74338 71355