Approx. weight

Material	kg	lb
Carbon steel	0.4	1.0
Stainless steel 304 and 304L	0.4	1.0
Stainless steel 316 and 316L	0.4	1.0

Densities 7.85, 7.9 and 8.0 g/cm3.
Calculated from the nominal dimensions, to the break shown: EN 1092-1 gives this type no length of its own.

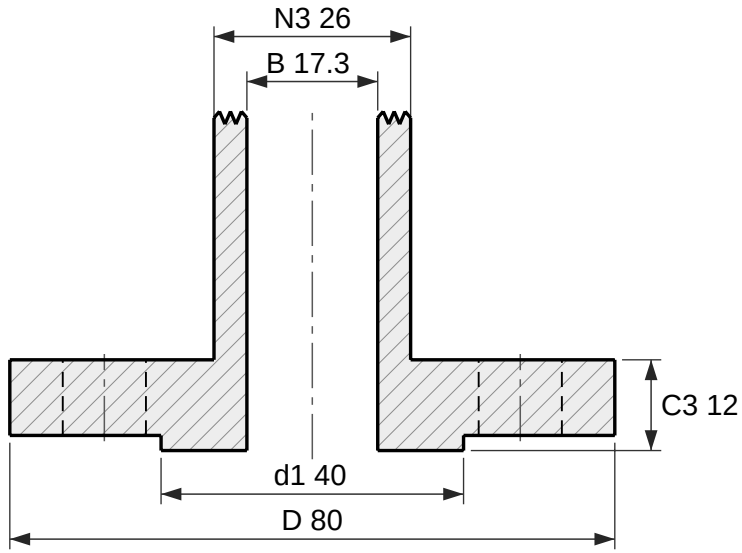

Section

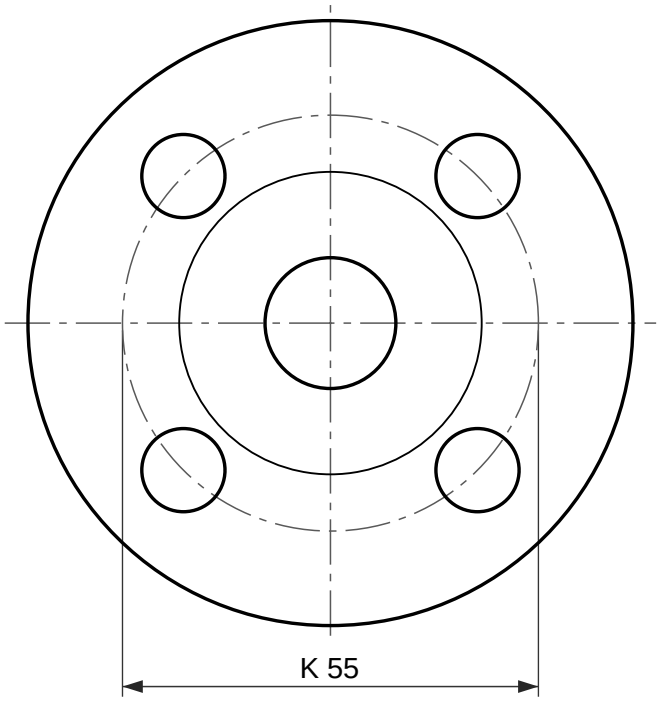

4 holes Ø11

Face view

Integral flange, EN 1092-1 type 21, PN 6

DN 15, facing type B1 (raised face)

Designation: Flange EN 1092-1/21/B1/DN 15/PN 6
Dimensions per EN 1092-1:2018, Table 11 (PN 6) and Table 8 (facing) and Annex A (wall thickness); tolerances per EN 1092-1.
C3 includes the raised face f1, as EN 1092-1 measures it.
An integral flange is machined into the vessel, valve or fitting it belongs to, so EN 1092-1 gives it no length and no bore: both come from that component. The neck is drawn to a break.
Reference drawing. The purchase order and EN 1092-1 govern.
Generated at rajendradatacenter.com/flanges/en-1092-1/

Dimension	mm	in
D Outside diameter	80	3.15
d1 Raised face diameter	40	1.57
f1 Raised face height	2	0.08
C3 Flange thickness, raised face included	12	0.47
N3 Hub diameter at back face	26	1.02
B Bore: EN 1092-1 does not specify it for this ty	17.3	0.68
K Bolt circle diameter	55	2.17
L Bolt holes, 4 off	11	0.43

4 bolts M10; holes 11 mm (0.43 in)

RAJENDRA INDUSTRIAL CORPORATION
rajendradatacenter.com
Drawing RIC-EN1092-21-PN6-DN15-B1
Scale 1:1 on A4
Units: mm (inches)
Date 2026-11-22
Quote: rajendradatacenter.com/rfq/
sales@rajendradatacenter.com
+91 74338 71355