Approx. weight

Material	kg	lb
Carbon steel	176	389
Stainless steel 304 and 304L	178	392
Stainless steel 316 and 316L	180	397

Densities 7.85, 7.9 and 8.0 g/cm3.
Calculated from the nominal dimensions, to the break shown: EN 1092-1 gives this type no length of its own.

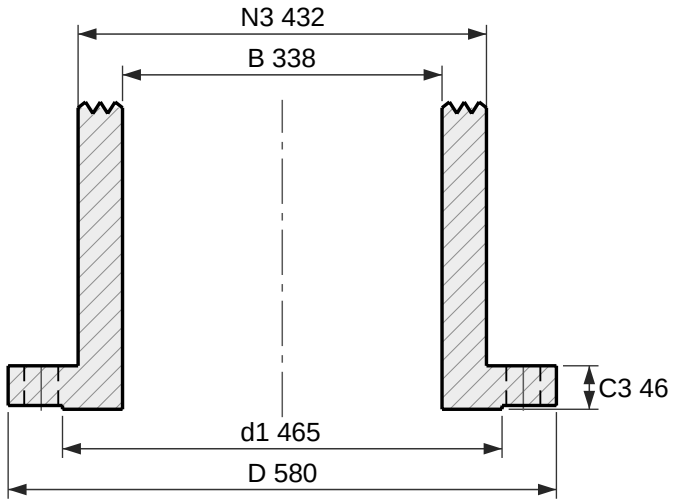

Section

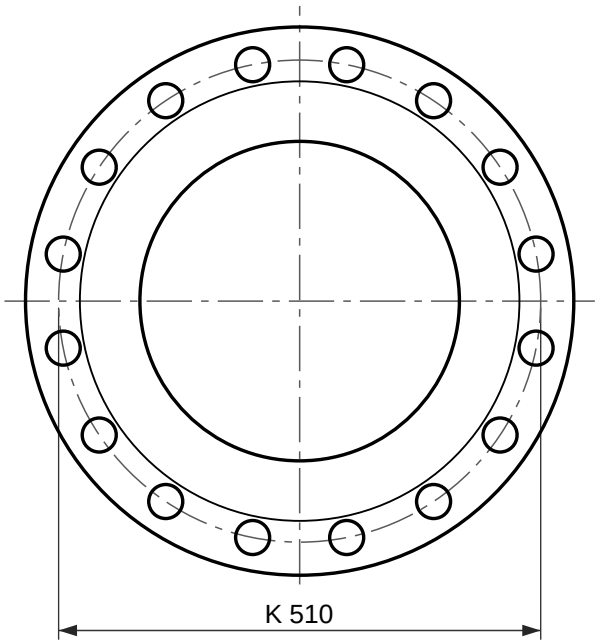

16 holes Ø36
Face view

Integral flange, EN 1092-1 type 21, PN 40

DN 350, facing type B1 (raised face)

Designation: Flange EN 1092-1/21/B1/DN 350/PN 40
Dimensions per EN 1092-1:2018, Table 15 (PN 40) and Table 8 (facing) and Annex A (wall thickness); tolerances per EN 1092-1.
C3 includes the raised face f1, as EN 1092-1 measures it.
An integral flange is machined into the vessel, valve or fitting it belongs to, so EN 1092-1 gives it no length and no bore: both come from that component. The neck is drawn to a break.
Reference drawing. The purchase order and EN 1092-1 govern.
Generated at rajendradatacenter.com/flanges/en-1092-1/

Dimension	mm	in
D Outside diameter	580	22.83
d1 Raised face diameter	465	18.31
f1 Raised face height	4	0.16
C3 Flange thickness, raised face included	46	1.81
N3 Hub diameter at back face	432	17.01
B Bore: EN 1092-1 does not specify it for this ty	338	13.31
K Bolt circle diameter	510	20.08
L Bolt holes, 16 off	36	1.42

16 bolts M33; holes 36 mm (1.42 in)

RAJENDRA INDUSTRIAL CORPORATION
rajendradatacenter.com
Drawing RIC-EN1092-21-PN40-DN350-B1
Scale 1:8 on A4
Units: mm (inches)
Date 2026-11-22
Quote: rajendradatacenter.com/rfq/
sales@rajendradatacenter.com
+91 74338 71355