Approx. weight

Material	kg	lb
Carbon steel	432	952
Stainless steel 304 and 304L	435	959
Stainless steel 316 and 316L	440	971

Densities 7.85, 7.9 and 8.0 g/cm3.
Calculated from the nominal dimensions, to the break shown: EN 1092-1 gives this type no length of its own.

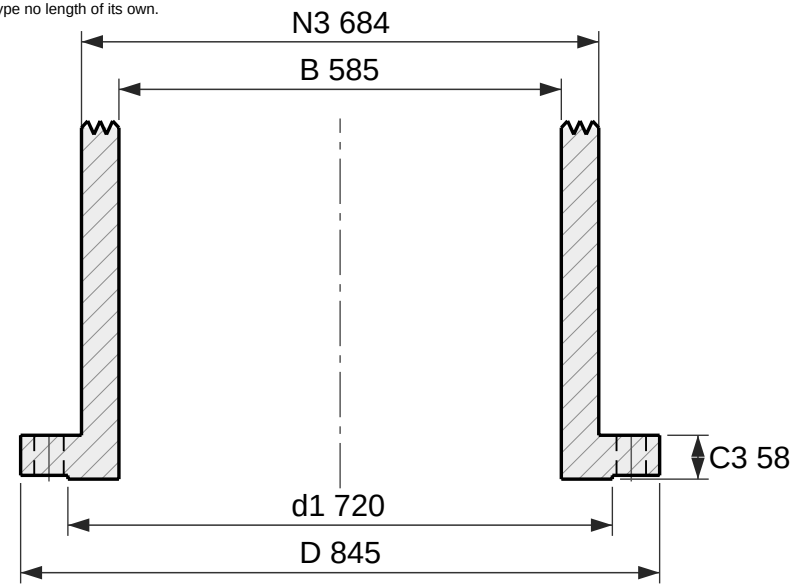

Section

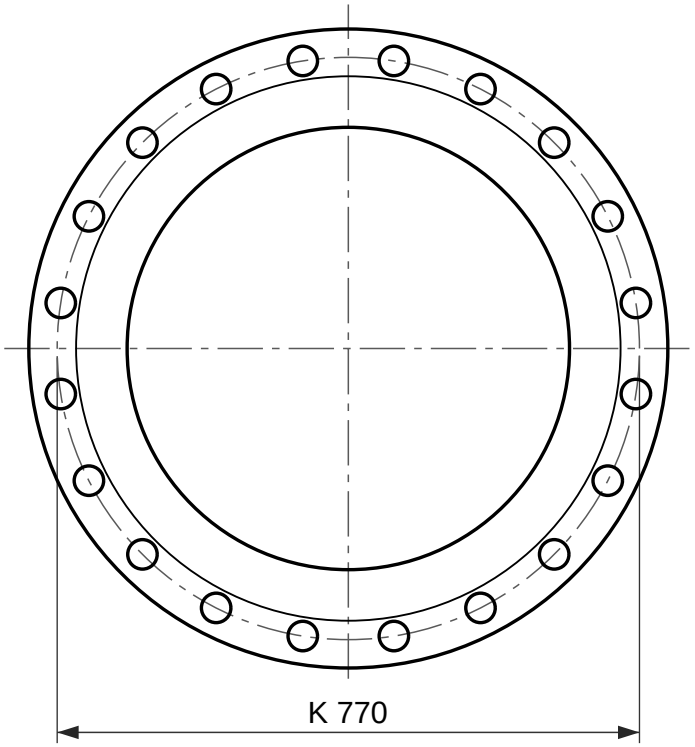

20 holes Ø39

Face view

Integral flange, EN 1092-1 type 21, PN 25

DN 600, facing type B1 (raised face)

Designation: Flange EN 1092-1/21/B1/DN 600/PN 25
Dimensions per EN 1092-1:2018, Table 14 (PN 25) and Table 8 (facing) and Annex A (wall thickness); tolerances per EN 1092-1.
C3 includes the raised face f1, as EN 1092-1 measures it.
An integral flange is machined into the vessel, valve or fitting it belongs to, so EN 1092-1 gives it no length and no bore: both come from that component. The neck is drawn to a break.
Reference drawing. The purchase order and EN 1092-1 govern.
Generated at rajendradatacenter.com/flanges/en-1092-1/

Dimension	mm	in
D Outside diameter	845	33.27
d1 Raised face diameter	720	28.35
f1 Raised face height	5	0.20
C3 Flange thickness, raised face included	58	2.28
N3 Hub diameter at back face	684	26.93
B Bore: EN 1092-1 does not specify it for this ty	585	23.03
K Bolt circle diameter	770	30.31
L Bolt holes, 20 off	39	1.54

20 bolts M36; holes 39 mm (1.54 in)

RAJENDRA INDUSTRIAL CORPORATION
rajendradatacenter.com
Drawing RIC-EN1092-21-PN25-DN600-B1
Scale 1:10 on A4
Units: mm (inches)
Date 2026-11-22
Quote: rajendradatacenter.com/rfq/
sales@rajendradatacenter.com
+91 74338 71355