Approx. weight

Material	kg	lb
Carbon steel	19.2	42.4
Stainless steel 304 and 304L	19.4	42.7
Stainless steel 316 and 316L	19.6	43.2

Densities 7.85, 7.9 and 8.0 g/cm3.
Calculated from the nominal dimensions, to the break shown: EN 1092-1 gives this type no length of its own.

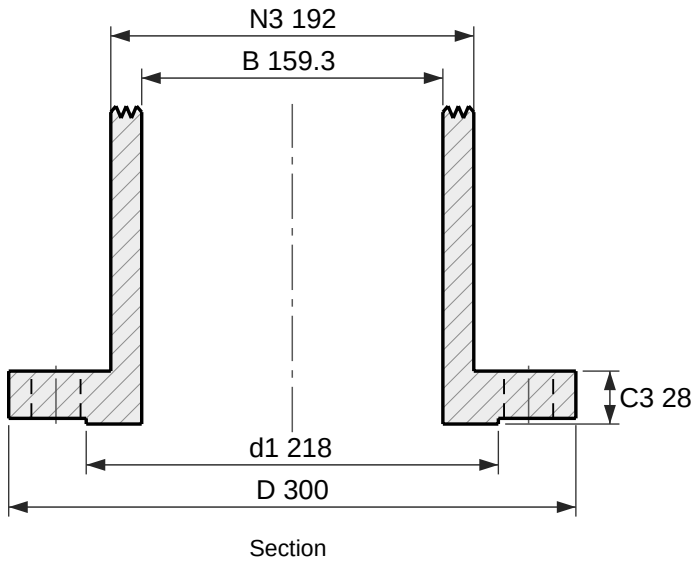

Section

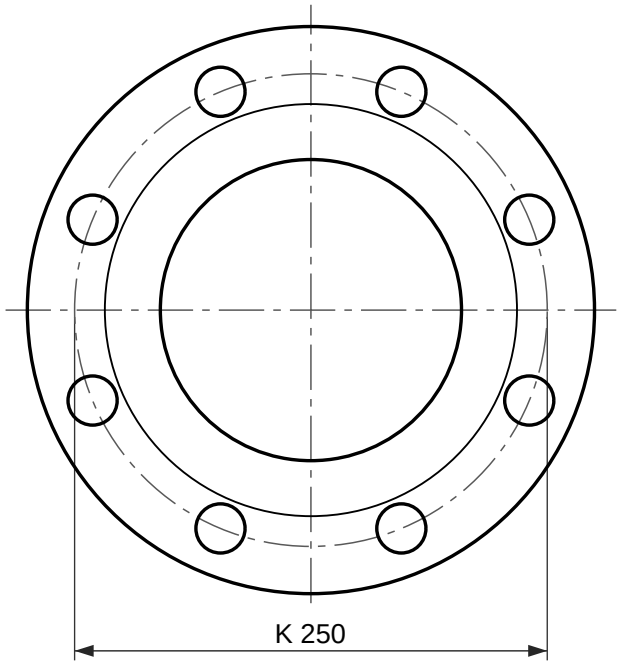

8 holes Ø26
Face view

Integral flange, EN 1092-1 type 21, PN 25

DN 150, facing type B1 (raised face)

Designation: Flange EN 1092-1/21/B1/DN 150/PN 25
Dimensions per EN 1092-1:2018, Table 14 (PN 25) and Table 8 (facing) and Annex A (wall thickness); tolerances per EN 1092-1.
C3 includes the raised face f1, as EN 1092-1 measures it.
An integral flange is machined into the vessel, valve or fitting it belongs to, so EN 1092-1 gives it no length and no bore: both come from that component. The neck is drawn to a break.
EN 1092-1 gives PN 25 the same dimensions as PN 40 in DN 150; only the marking differs.
Reference drawing. The purchase order and EN 1092-1 govern.
Generated at rajendradatacenter.com/flanges/en-1092-1/

Dimension	mm	in
D Outside diameter	300	11.81
d1 Raised face diameter	218	8.58
f1 Raised face height	3	0.12
C3 Flange thickness, raised face included	28	1.10
N3 Hub diameter at back face	192	7.56
B Bore: EN 1092-1 does not specify it for this ty	159.3	6.27
K Bolt circle diameter	250	9.84
L Bolt holes, 8 off	26	1.02

8 bolts M24; holes 26 mm (1.02 in)

RAJENDRA INDUSTRIAL CORPORATION
rajendradatacenter.com
Drawing RIC-EN1092-21-PN25-DN150-B1
Scale 1:4 on A4
Units: mm (inches)
Date 2026-11-22
Quote: rajendradatacenter.com/rfq/
sales@rajendradatacenter.com
+91 74338 71355