**Approx. weight**

| Material | kg | lb |
|---|---|---|
| Carbon steel | 0.9 | 1.9 |
| Stainless steel 304 and 304L | 0.9 | 1.9 |
| Stainless steel 316 and 316L | 0.9 | 2.0 |

Densities 7.85, 7.9 and 8.0 g/cm3.
Calculated from the nominal dimensions, to the break shown: EN 1092-1 gives this type no length of its own.

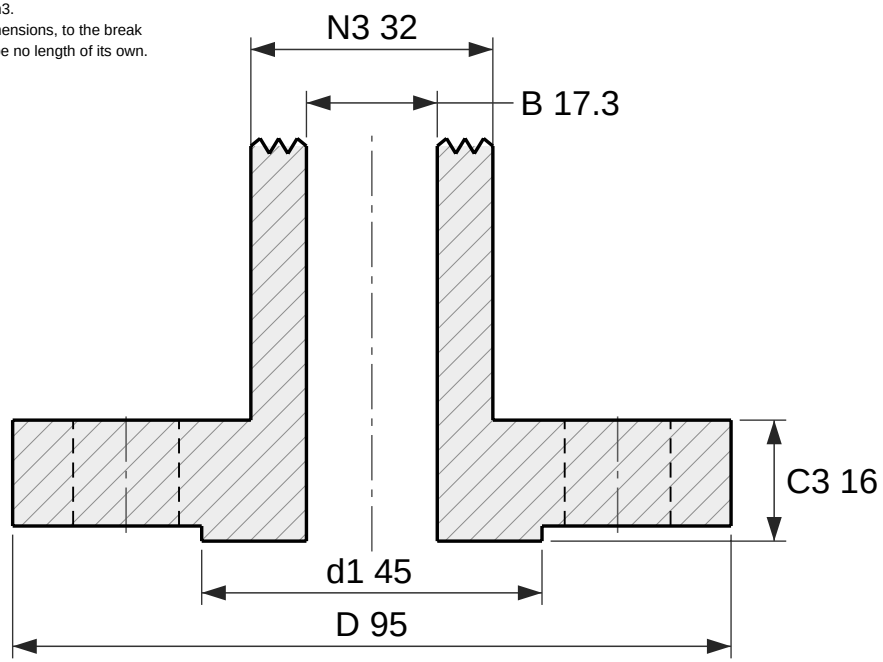


Section

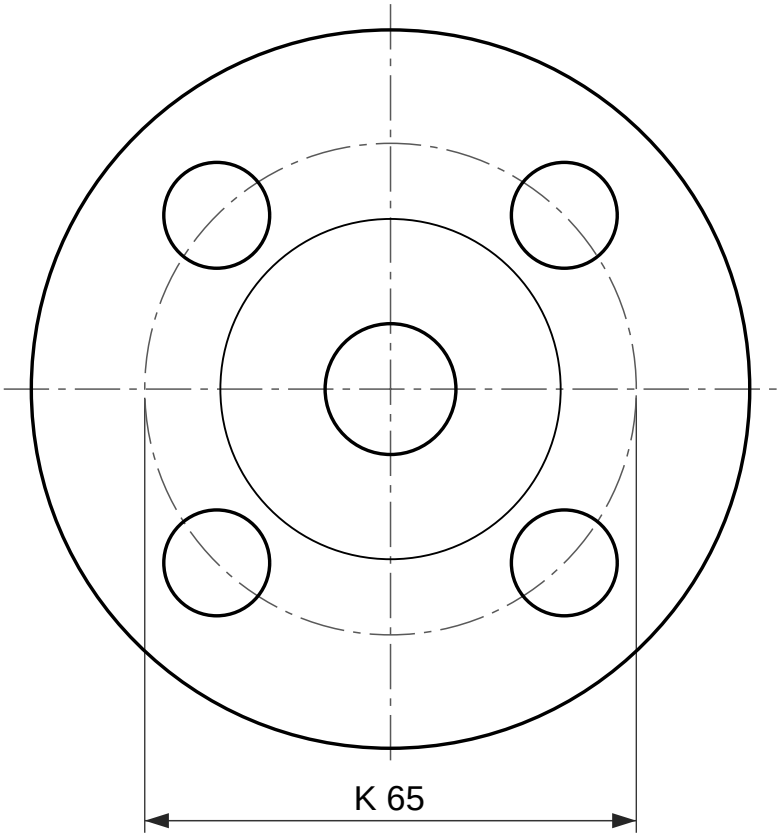


4 holes Ø14

Face view

# Integral flange, EN 1092-1 type 21, PN 25

DN 15, facing type B1 (raised face)

Designation: Flange EN 1092-1/21/B1/DN 15/PN 25
Dimensions per EN 1092-1:2018, Table 14 (PN 25) and Table 8 (facing) and Annex A (wall thickness); tolerances per EN 1092-1.
C3 includes the raised face f1, as EN 1092-1 measures it.
An integral flange is machined into the vessel, valve or fitting it belongs to, so EN 1092-1 gives it no length and no bore: both come from that component. The neck is drawn to a break.
EN 1092-1 gives PN 25 the same dimensions as PN 10, PN 16, PN 40 in DN 15; only the marking differs.
Reference drawing. The purchase order and EN 1092-1 govern.
Generated at rajendradatacenter.com/flanges/en-1092-1/

| Dimension | mm | in |
|---|---|---|
| D Outside diameter | 95 | 3.74 |
| d1 Raised face diameter | 45 | 1.77 |
| f1 Raised face height | 2 | 0.08 |
| C3 Flange thickness, raised face included | 16 | 0.63 |
| N3 Hub diameter at back face | 32 | 1.26 |
| B Bore: EN 1092-1 does not specify it for this ty | 17.3 | 0.68 |
| K Bolt circle diameter | 65 | 2.56 |
| L Bolt holes, 4 off | 14 | 0.55 |

4 bolts M12; holes 14 mm (0.55 in)

RAJENDRA INDUSTRIAL CORPORATION
rajendradatacenter.com
Drawing RIC-EN1092-21-PN25-DN15-B1
Scale 1:1 on A4
Units: mm (inches)
Date 2026-11-22
Quote: rajendradatacenter.com/rfq/
sales@rajendradatacenter.com
+91 74338 71355