**Approx. weight**

| Material | kg | lb |
|---|---|---|
| Carbon steel | 261 | 576 |
| Stainless steel 304 and 304L | 263 | 580 |
| Stainless steel 316 and 316L | 266 | 587 |

Densities 7.85, 7.9 and 8.0 g/cm3.
Calculated from the nominal dimensions, to the break shown: EN 1092-1 gives this type no length of its own.

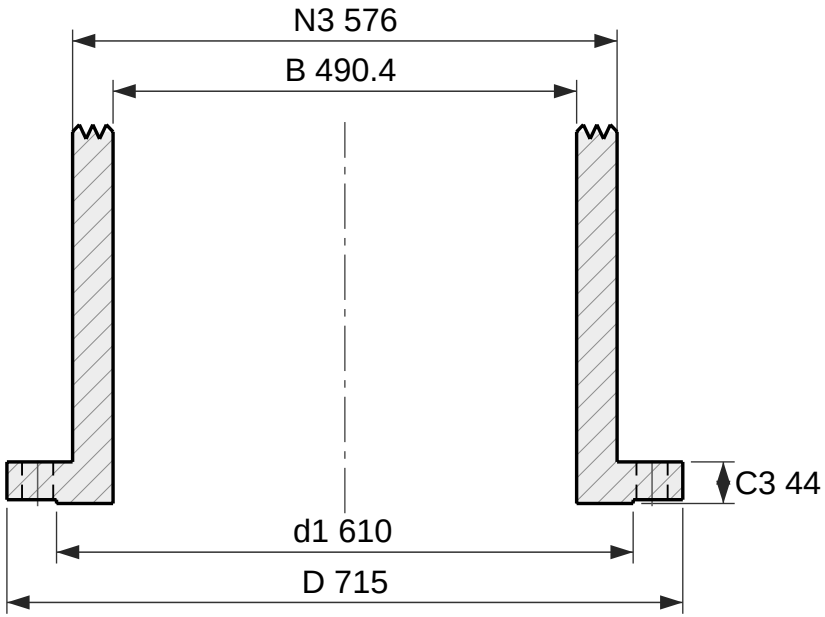


Section

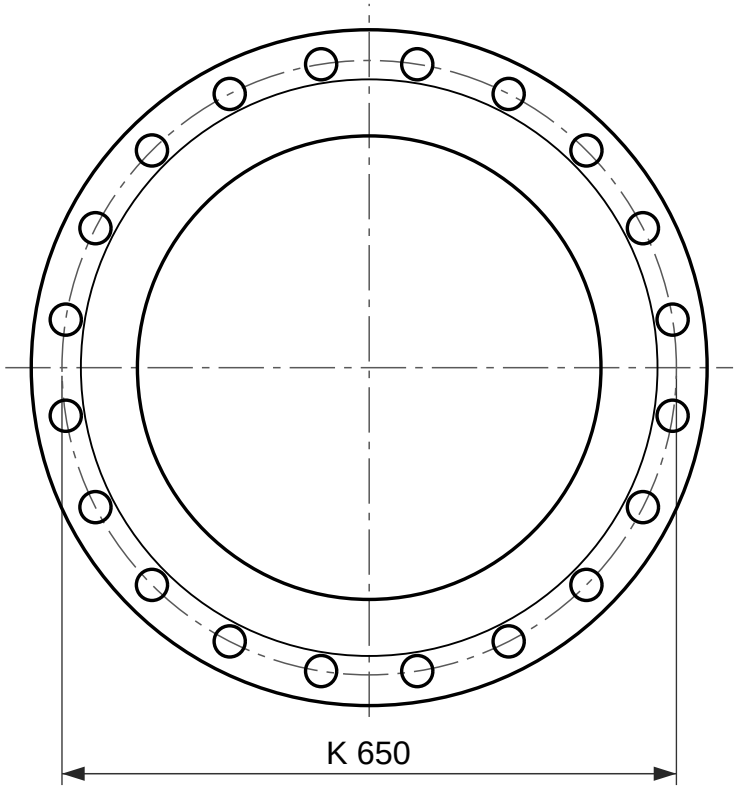


20 holes Ø33

Face view

# Integral flange, EN 1092-1 type 21, PN 16

DN 500, facing type B1 (raised face)

Designation: Flange EN 1092-1/21/B1/DN 500/PN 16
Dimensions per EN 1092-1:2018, Table 13 (PN 16) and Table 8 (facing) and Annex A (wall thickness); tolerances per EN 1092-1.
C3 includes the raised face f1, as EN 1092-1 measures it.
An integral flange is machined into the vessel, valve or fitting it belongs to, so EN 1092-1 gives it no length and no bore: both come from that component. The neck is drawn to a break.
Reference drawing. The purchase order and EN 1092-1 govern.
Generated at rajendradatacenter.com/flanges/en-1092-1/

| Dimension | mm | in |
|---|---|---|
| D Outside diameter | 715 | 28.15 |
| d1 Raised face diameter | 610 | 24.02 |
| f1 Raised face height | 4 | 0.16 |
| C3 Flange thickness, raised face included | 44 | 1.73 |
| N3 Hub diameter at back face | 576 | 22.68 |
| B Bore: EN 1092-1 does not specify it for this ty | 490.4 | 19.31 |
| K Bolt circle diameter | 650 | 25.59 |
| L Bolt holes, 20 off | 33 | 1.30 |

20 bolts M30; holes 33 mm (1.30 in)

RAJENDRA INDUSTRIAL CORPORATION
rajendradatacenter.com
Drawing RIC-EN1092-21-PN16-DN500-B1
Scale 1:8 on A4
Units: mm (inches)
Date 2026-11-22
Quote: rajendradatacenter.com/rfq/
sales@rajendradatacenter.com
+91 74338 71355