Approx. weight

Material	kg	lb
Carbon steel	133	293
Stainless steel 304 and 304L	134	295
Stainless steel 316 and 316L	135	299

Densities 7.85, 7.9 and 8.0 g/cm3.
Calculated from the nominal dimensions, to the break shown: EN 1092-1 gives this type no length of its own.

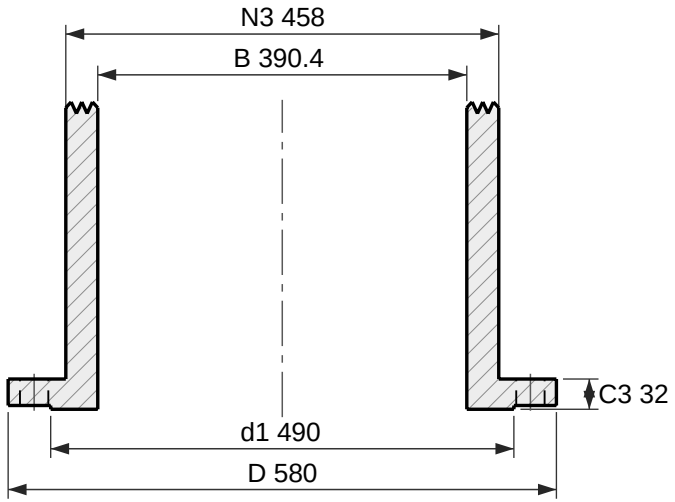

Section

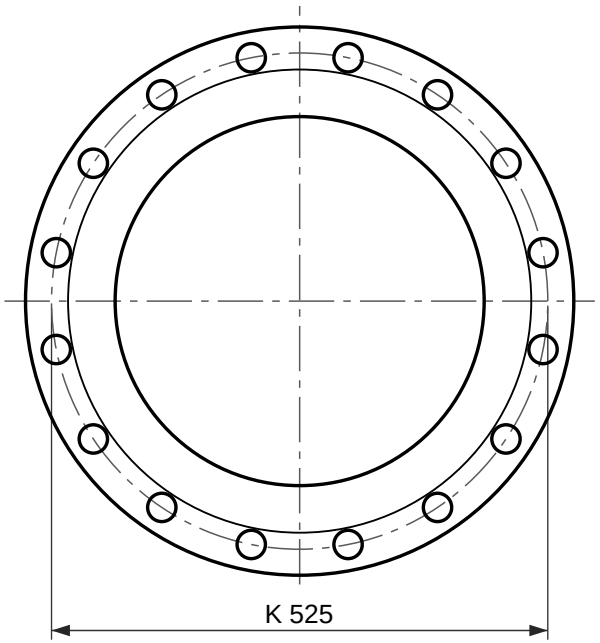

16 holes Ø30
Face view

Integral flange, EN 1092-1 type 21, PN 16

DN 400, facing type B1 (raised face)

Designation: Flange EN 1092-1/21/B1/DN 400/PN 16
Dimensions per EN 1092-1:2018, Table 13 (PN 16) and Table 8 (facing) and Annex A (wall thickness); tolerances per EN 1092-1.
C3 includes the raised face f1, as EN 1092-1 measures it.
An integral flange is machined into the vessel, valve or fitting it belongs to, so EN 1092-1 gives it no length and no bore: both come from that component. The neck is drawn to a break.
Reference drawing. The purchase order and EN 1092-1 govern.
Generated at rajendradatacenter.com/flanges/en-1092-1/

Dimension	mm	in
D Outside diameter	580	22.83
d1 Raised face diameter	490	19.29
f1 Raised face height	4	0.16
C3 Flange thickness, raised face included	32	1.26
N3 Hub diameter at back face	458	18.03
B Bore: EN 1092-1 does not specify it for this ty	390.4	15.37
K Bolt circle diameter	525	20.67
L Bolt holes, 16 off	30	1.18

16 bolts M27; holes 30 mm (1.18 in)

RAJENDRA INDUSTRIAL CORPORATION
rajendradatacenter.com
Drawing RIC-EN1092-21-PN16-DN400-B1
Scale 1:8 on A4
Units: mm (inches)
Date 2026-11-22
Quote: rajendradatacenter.com/rfq/
sales@rajendradatacenter.com
+91 74338 71355