Approx. weight

Material	kg	lb
Carbon steel	241	532
Stainless steel 304 and 304L	243	535
Stainless steel 316 and 316L	246	542

Densities 7.85, 7.9 and 8.0 g/cm3.
Calculated from the nominal dimensions, to the break shown: EN 1092-1 gives this type no length of its own.

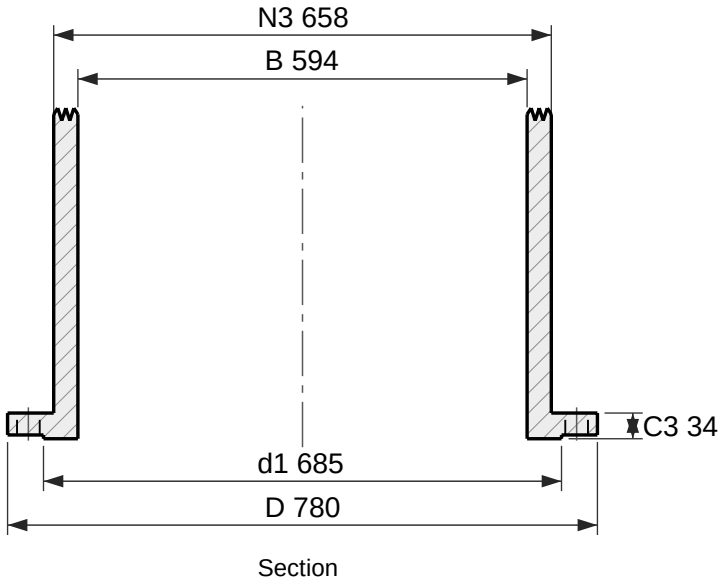

Section

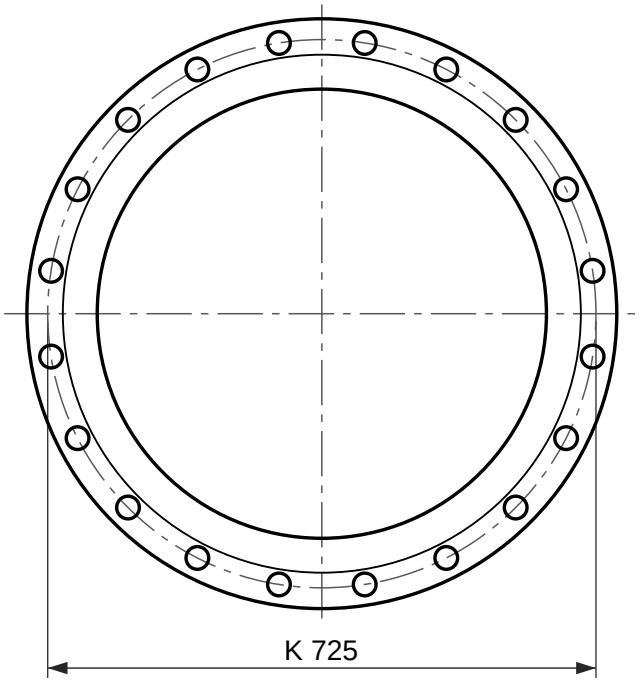

20 holes Ø30
Face view

Integral flange, EN 1092-1 type 21, PN 10

DN 600, facing type B1 (raised face)

Designation: Flange EN 1092-1/21/B1/DN 600/PN 10
Dimensions per EN 1092-1:2018, Table 12 (PN 10) and Table 8 (facing) and Annex A (wall thickness); tolerances per EN 1092-1.
C3 includes the raised face f1, as EN 1092-1 measures it.
An integral flange is machined into the vessel, valve or fitting it belongs to, so EN 1092-1 gives it no length and no bore: both come from that component. The neck is drawn to a break.
Reference drawing. The purchase order and EN 1092-1 govern.
Generated at rajendradatacenter.com/flanges/en-1092-1/

Dimension	mm	in
D Outside diameter	780	30.71
d1 Raised face diameter	685	26.97
f1 Raised face height	5	0.20
C3 Flange thickness, raised face included	34	1.34
N3 Hub diameter at back face	658	25.91
B Bore: EN 1092-1 does not specify it for this ty	594	23.39
K Bolt circle diameter	725	28.54
L Bolt holes, 20 off	30	1.18

20 bolts M27; holes 30 mm (1.18 in)

RAJENDRA INDUSTRIAL CORPORATION
rajendradatacenter.com
Drawing RIC-EN1092-21-PN10-DN600-B1
Scale 1:10 on A4
Units: mm (inches)
Date 2026-11-22
Quote: rajendradatacenter.com/rfq/
sales@rajendradatacenter.com
+91 74338 71355