**Approx. weight**

| Material | kg | lb |
|---|---|---|
| Carbon steel | 96.9 | 214 |
| Stainless steel 304 and 304L | 97.5 | 215 |
| Stainless steel 316 and 316L | 98.7 | 218 |

Densities 7.85, 7.9 and 8.0 g/cm3.
Calculated from the nominal dimensions, to the break shown: EN 1092-1 gives this type no length of its own.

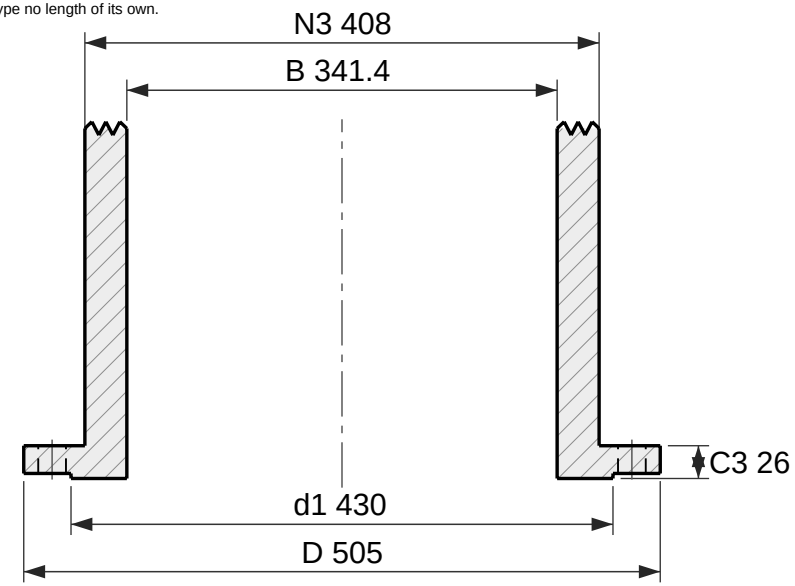


Section

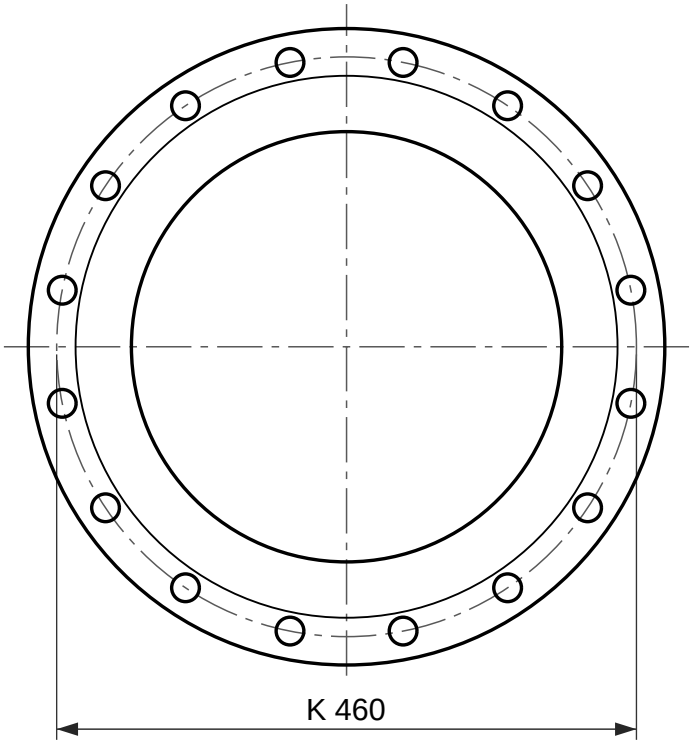


16 holes Ø22

Face view

# Integral flange, EN 1092-1 type 21, PN 10

DN 350, facing type B1 (raised face)

Designation: Flange EN 1092-1/21/B1/DN 350/PN 10
Dimensions per EN 1092-1:2018, Table 12 (PN 10) and Table 8 (facing) and Annex A (wall thickness); tolerances per EN 1092-1.
C3 includes the raised face f1, as EN 1092-1 measures it.
An integral flange is machined into the vessel, valve or fitting it belongs to, so EN 1092-1 gives it no length and no bore: both come from that component. The neck is drawn to a break.
Reference drawing. The purchase order and EN 1092-1 govern.
Generated at rajendradatacenter.com/flanges/en-1092-1/

| Dimension | mm | in |
|---|---|---|
| D Outside diameter | 505 | 19.88 |
| d1 Raised face diameter | 430 | 16.93 |
| f1 Raised face height | 4 | 0.16 |
| C3 Flange thickness, raised face included | 26 | 1.02 |
| N3 Hub diameter at back face | 408 | 16.06 |
| B Bore: EN 1092-1 does not specify it for this ty | 341.4 | 13.44 |
| K Bolt circle diameter | 460 | 18.11 |
| L Bolt holes, 16 off | 22 | 0.87 |

16 bolts M20; holes 22 mm (0.87 in)

RAJENDRA INDUSTRIAL CORPORATION
rajendradatacenter.com
Drawing RIC-EN1092-21-PN10-DN350-B1
Scale 1:6 on A4
Units: mm (inches)
Date 2026-11-22
Quote: rajendradatacenter.com/rfq/
sales@rajendradatacenter.com
+91 74338 71355