Approx. weight

Material	kg	lb
Carbon steel	1.3	2.8
Stainless steel 304 and 304L	1.3	2.8
Stainless steel 316 and 316L	1.3	2.8

Densities 7.85, 7.9 and 8.0 g/cm3.
Calculated from the nominal dimensions, to the break shown: EN 1092-1 gives this type no length of its own.

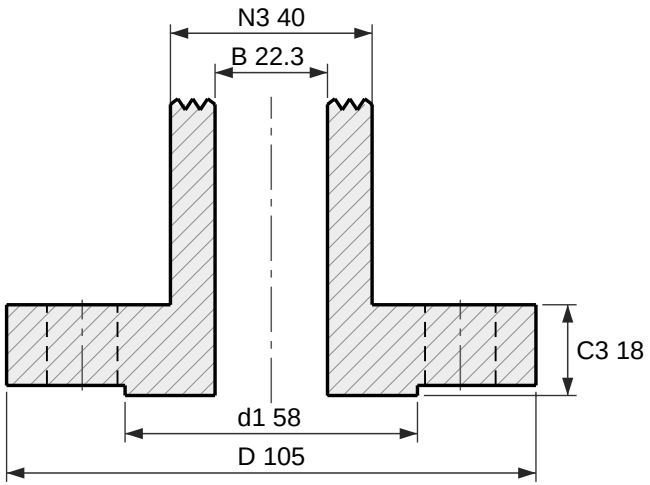

Section

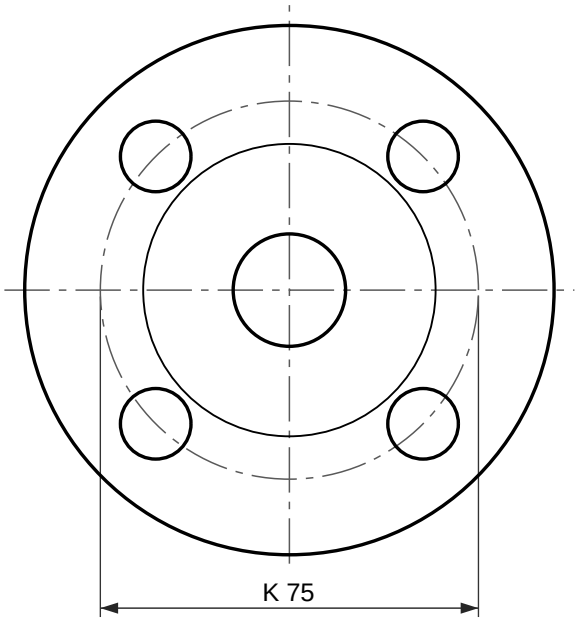

4 holes Ø14
Face view

Integral flange, EN 1092-1 type 21, PN 10

DN 20, facing type B1 (raised face)

Designation: Flange EN 1092-1/21/B1/DN 20/PN 10
Dimensions per EN 1092-1:2018, Table 12 (PN 10) and Table 8 (facing) and Annex A (wall thickness); tolerances per EN 1092-1.
C3 includes the raised face f1, as EN 1092-1 measures it.
An integral flange is machined into the vessel, valve or fitting it belongs to, so EN 1092-1 gives it no length and no bore: both come from that component. The neck is drawn to a break.
EN 1092-1 gives PN 10 the same dimensions as PN 16, PN 25, PN 40 in DN 20; only the marking differs.
Reference drawing. The purchase order and EN 1092-1 govern.
Generated at rajendradatacenter.com/flanges/en-1092-1/

Dimension	mm	in
D Outside diameter	105	4.13
d1 Raised face diameter	58	2.28
f1 Raised face height	2	0.08
C3 Flange thickness, raised face included	18	0.71
N3 Hub diameter at back face	40	1.57
B Bore: EN 1092-1 does not specify it for this ty	22.3	0.88
K Bolt circle diameter	75	2.95
L Bolt holes, 4 off	14	0.55

4 bolts M12; holes 14 mm (0.55 in)

RAJENDRA INDUSTRIAL CORPORATION
rajendradatacenter.com
Drawing RIC-EN1092-21-PN10-DN20-B1
Scale 1:1.5 on A4
Units: mm (inches)
Date 2026-11-22
Quote: rajendradatacenter.com/rfq/
sales@rajendradatacenter.com
+91 74338 71355