Approx. weight

Material	kg	lb
Carbon steel	2.4	5.4
Stainless steel 304 and 304L	2.4	5.4
Stainless steel 316 and 316L	2.5	5.5

Densities 7.85, 7.9 and 8.0 g/cm3.
Calculated from the dimensions as the standard gives them, with no allowance for tolerance.

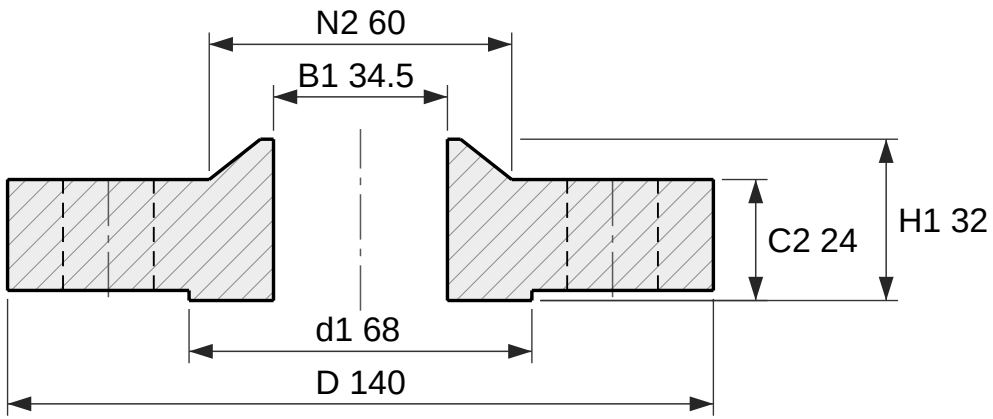

Section

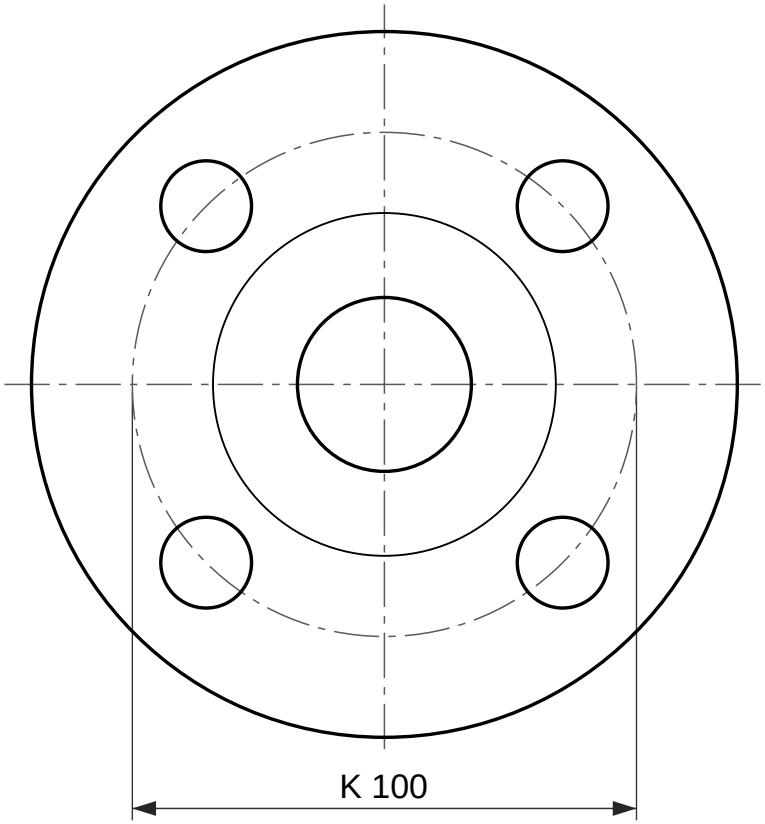

4 holes Ø18

Face view

Hubbed slip-on flange, EN 1092-1 type 12, PN 63

DN 25, facing type B1 (raised face)

Designation: Flange EN 1092-1/12/B1/DN 25/PN 63
Dimensions per EN 1092-1:2018, Table 16 (PN 63) and Table 8 (facing); tolerances per EN 1092-1.
C2 and H1 include the raised face f1, as EN 1092-1 measures it.
EN 1092-1 dimensions the hub of this type at the back face only (N2) and 5.6.2 lets it run parallel or taper up to 7 degrees; it is drawn tapering out to the pipe wall.
EN 1092-1 gives PN 63 the same dimensions as PN 100 in DN 25; only the marking differs.
Reference drawing. The purchase order and EN 1092-1 govern.
Generated at rajendradatacenter.com/flanges/en-1092-1/

Dimension	mm	in
D Outside diameter	140	5.51
d1 Raised face diameter	68	2.68
f1 Raised face height	2	0.08
C2 Flange thickness, raised face included	24	0.94
H1 Length through hub, raised face included	32	1.26
N2 Hub diameter at back face	60	2.36
B1 Bore	34.5	1.36
K Bolt circle diameter	100	3.94
L Bolt holes, 4 off	18	0.71

4 bolts M16; holes 18 mm (0.71 in)

RAJENDRA INDUSTRIAL CORPORATION
rajendradatacenter.com
Drawing RIC-EN1092-12-PN63-DN25-B1
Scale 1:1.5 on A4
Units: mm (inches)
Date 2026-11-22
Quote: rajendradatacenter.com/rfq/
sales@rajendradatacenter.com
+91 74338 71355