Approx. weight

Material	kg	lb
Carbon steel	1.0	2.3
Stainless steel 304 and 304L	1.0	2.3
Stainless steel 316 and 316L	1.1	2.3

Densities 7.85, 7.9 and 8.0 g/cm3.
Calculated from the dimensions as the standard gives them, with no allowance for tolerance.

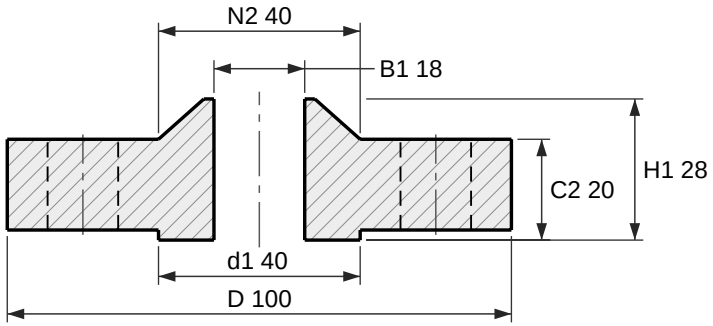

Section

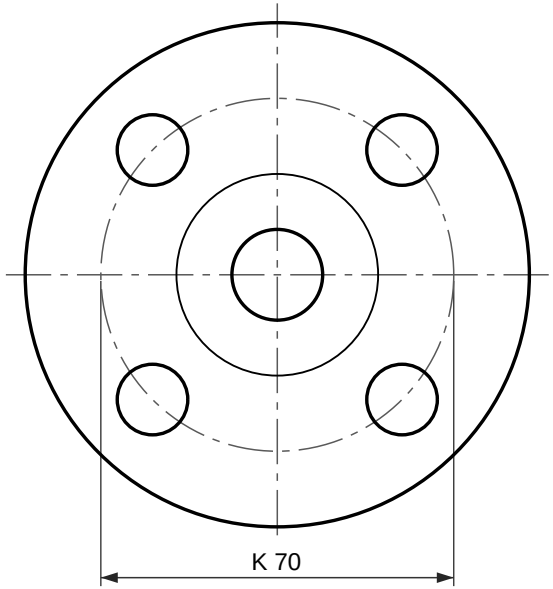

4 holes Ø14
Face view

Hubbed slip-on flange, EN 1092-1 type 12, PN 63

DN 10, facing type B1 (raised face)

Designation: Flange EN 1092-1/12/B1/DN 10/PN 63
Dimensions per EN 1092-1:2018, Table 16 (PN 63) and Table 8 (facing); tolerances per EN 1092-1.
C2 and H1 include the raised face f1, as EN 1092-1 measures it.
EN 1092-1 dimensions the hub of this type at the back face only (N2) and 5.6.2 lets it run parallel or taper up to 7 degrees; it is drawn tapering out to the pipe wall.
EN 1092-1 gives PN 63 the same dimensions as PN 100 in DN 10; only the marking differs.
Reference drawing. The purchase order and EN 1092-1 govern.
Generated at rajendradatacenter.com/flanges/en-1092-1/

Dimension	mm	in
D Outside diameter	100	3.94
d1 Raised face diameter	40	1.57
f1 Raised face height	2	0.08
C2 Flange thickness, raised face included	20	0.79
H1 Length through hub, raised face included	28	1.10
N2 Hub diameter at back face	40	1.57
B1 Bore	18	0.71
K Bolt circle diameter	70	2.76
L Bolt holes, 4 off	14	0.55

4 bolts M12; holes 14 mm (0.55 in)

RAJENDRA INDUSTRIAL CORPORATION

rajendradatacenter.com
Drawing RIC-EN1092-12-PN63-DN10-B1
Scale 1:1.5 on A4
Units: mm (inches)
Date 2026-11-22
Quote: rajendradatacenter.com/rfq/
sales@rajendradatacenter.com
+91 74338 71355