**Approx. weight**

| Material | kg | lb |
|---|---|---|
| Carbon steel | 2.6 | 5.7 |
| Stainless steel 304 and 304L | 2.6 | 5.7 |
| Stainless steel 316 and 316L | 2.6 | 5.8 |

Densities 7.85, 7.9 and 8.0 g/cm3.
Calculated from the dimensions as the standard gives them, with no allowance for tolerance.

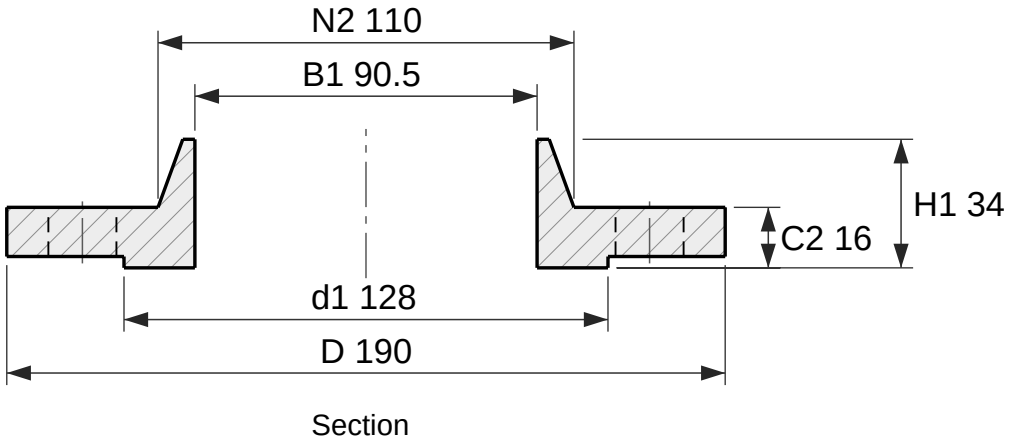


Section

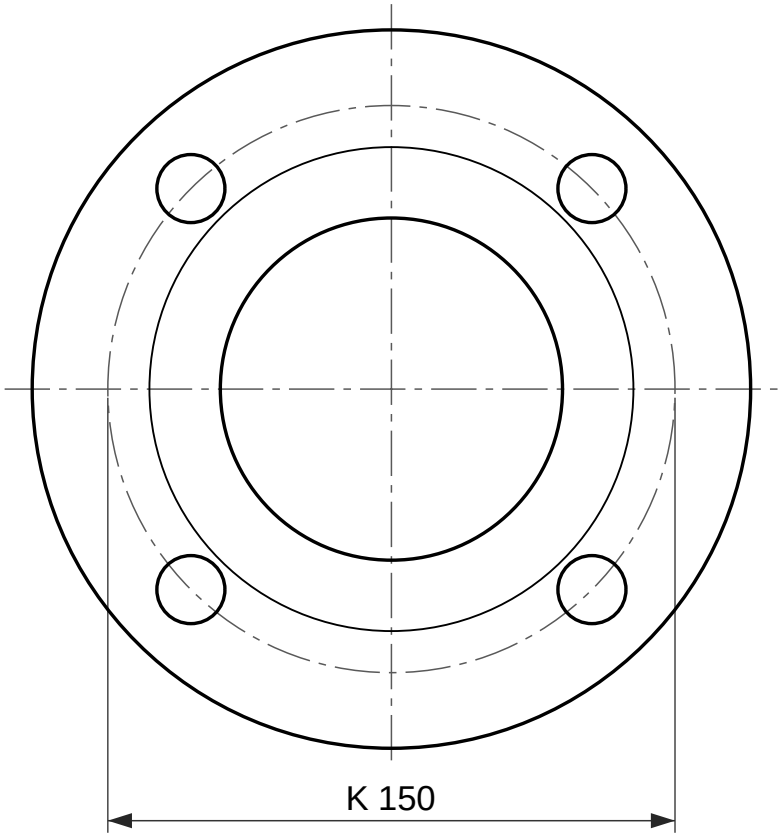


4 holes Ø18

Face view

# Hubbed slip-on flange, EN 1092-1 type 12, PN 6

DN 80, facing type B1 (raised face)

Designation: Flange EN 1092-1/12/B1/DN 80/PN 6
Dimensions per EN 1092-1:2018, Table 11 (PN 6) and Table 8 (facing); tolerances per EN 1092-1.
C2 and H1 include the raised face f1, as EN 1092-1 measures it.
EN 1092-1 dimensions the hub of this type at the back face only (N2) and 5.6.2 lets it run parallel or taper up to 7 degrees; it is drawn tapering out to the pipe wall.
Reference drawing. The purchase order and EN 1092-1 govern.
Generated at rajendradatacenter.com/flanges/en-1092-1/

| Dimension | mm | in |
|---|---|---|
| D Outside diameter | 190 | 7.48 |
| d1 Raised face diameter | 128 | 5.04 |
| f1 Raised face height | 3 | 0.12 |
| C2 Flange thickness, raised face included | 16 | 0.63 |
| H1 Length through hub, raised face included | 34 | 1.34 |
| N2 Hub diameter at back face | 110 | 4.33 |
| B1 Bore | 90.5 | 3.56 |
| K Bolt circle diameter | 150 | 5.91 |
| L Bolt holes, 4 off | 18 | 0.71 |

4 bolts M16; holes 18 mm (0.71 in)

RAJENDRA INDUSTRIAL CORPORATION
rajendradatacenter.com
Drawing RIC-EN1092-12-PN6-DN80-B1
Scale 1:2 on A4
Units: mm (inches)
Date 2026-11-22
Quote: rajendradatacenter.com/rfq/
sales@rajendradatacenter.com
+91 74338 71355