Approx. weight

Material	kg	lb
Carbon steel	78.3	173
Stainless steel 304 and 304L	78.8	174
Stainless steel 316 and 316L	79.8	176

Densities 7.85, 7.9 and 8.0 g/cm3.
Calculated from the dimensions as the standard gives them, with no allowance for tolerance.

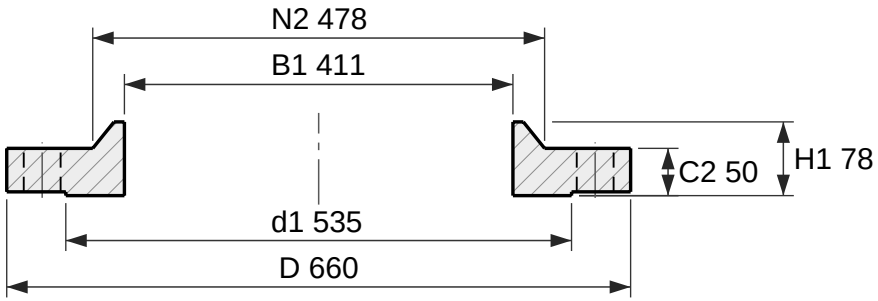

Section

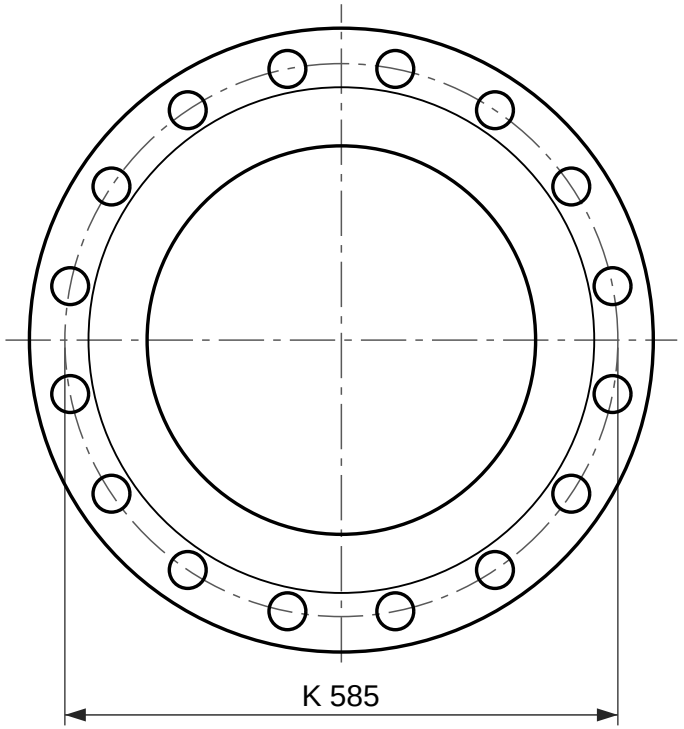

16 holes Ø39

Face view

Hubbed slip-on flange, EN 1092-1 type 12, PN 40

DN 400, facing type B1 (raised face)

Designation: Flange EN 1092-1/12/B1/DN 400/PN 40
Dimensions per EN 1092-1:2018, Table 15 (PN 40) and Table 8 (facing); tolerances per EN 1092-1.
C2 and H1 include the raised face f1, as EN 1092-1 measures it.
EN 1092-1 dimensions the hub of this type at the back face only (N2) and 5.6.2 lets it run parallel or taper up to 7 degrees; it is drawn tapering out to the pipe wall.
Reference drawing. The purchase order and EN 1092-1 govern.
Generated at rajendradatacenter.com/flanges/en-1092-1/

Dimension	mm	in
D Outside diameter	660	25.98
d1 Raised face diameter	535	21.06
f1 Raised face height	4	0.16
C2 Flange thickness, raised face included	50	1.97
H1 Length through hub, raised face included	78	3.07
N2 Hub diameter at back face	478	18.82
B1 Bore	411	16.18
K Bolt circle diameter	585	23.03
L Bolt holes, 16 off	39	1.54

16 bolts M36; holes 39 mm (1.54 in)

RAJENDRA INDUSTRIAL CORPORATION
rajendradatacenter.com
Drawing RIC-EN1092-12-PN40-DN400-B1
Scale 1:8 on A4
Units: mm (inches)
Date 2026-11-22
Quote: rajendradatacenter.com/rfq/
sales@rajendradatacenter.com
+91 74338 71355