Approx. weight

Material	kg	lb
Carbon steel	27.1	59.8
Stainless steel 304 and 304L	27.3	60.2
Stainless steel 316 and 316L	27.6	60.9

Densities 7.85, 7.9 and 8.0 g/cm3.
Calculated from the dimensions as the standard gives them, with no allowance for tolerance.

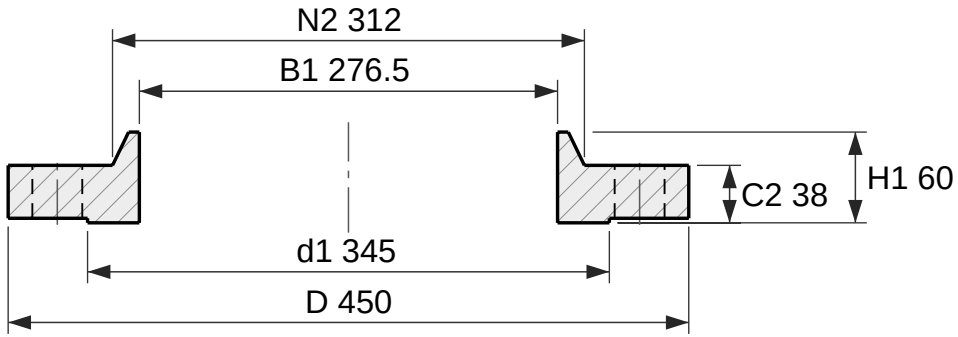

Section

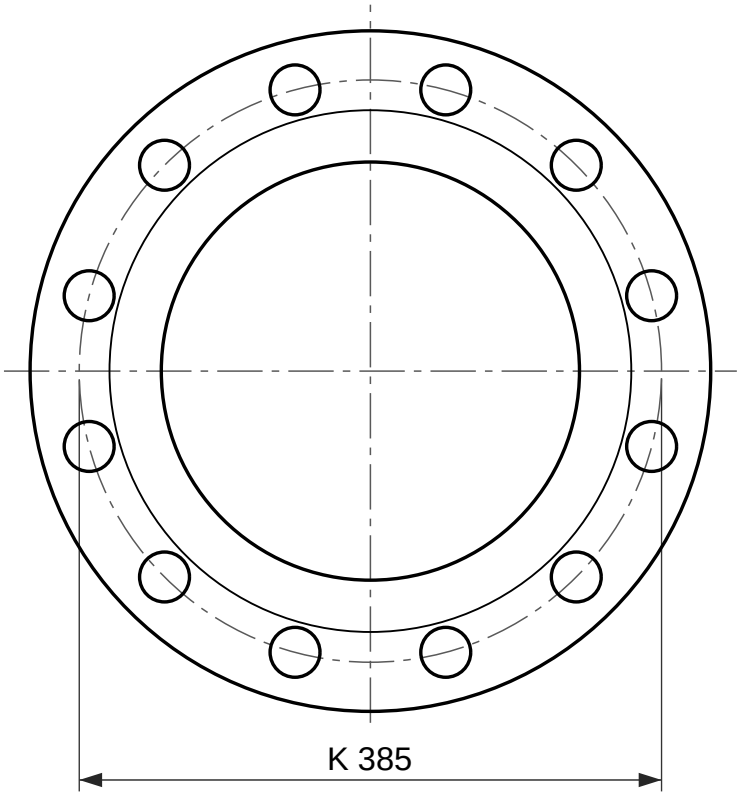

12 holes Ø33

Face view

Hubbed slip-on flange, EN 1092-1 type 12, PN 40

DN 250, facing type B1 (raised face)

Designation: Flange EN 1092-1/12/B1/DN 250/PN 40
Dimensions per EN 1092-1:2018, Table 15 (PN 40) and Table 8 (facing); tolerances per EN 1092-1.
C2 and H1 include the raised face f1, as EN 1092-1 measures it.
EN 1092-1 dimensions the hub of this type at the back face only (N2) and 5.6.2 lets it run parallel or taper up to 7 degrees; it is drawn tapering out to the pipe wall.
Reference drawing. The purchase order and EN 1092-1 govern.
Generated at rajendradatacenter.com/flanges/en-1092-1/

Dimension	mm	in
D Outside diameter	450	17.72
d1 Raised face diameter	345	13.58
f1 Raised face height	3	0.12
C2 Flange thickness, raised face included	38	1.50
H1 Length through hub, raised face included	60	2.36
N2 Hub diameter at back face	312	12.28
B1 Bore	276.5	10.89
K Bolt circle diameter	385	15.16
L Bolt holes, 12 off	33	1.30

12 bolts M30; holes 33 mm (1.30 in)

RAJENDRA INDUSTRIAL CORPORATION
rajendradatacenter.com
Drawing RIC-EN1092-12-PN40-DN250-B1
Scale 1:5 on A4
Units: mm (inches)
Date 2026-11-22
Quote: rajendradatacenter.com/rfq/
sales@rajendradatacenter.com
+91 74338 71355