Approx. weight

Material	kg	lb
Carbon steel	17.4	38.3
Stainless steel 304 and 304L	17.5	38.5
Stainless steel 316 and 316L	17.7	39.0

Densities 7.85, 7.9 and 8.0 g/cm3.
Calculated from the dimensions as the standard gives them, with no allowance for tolerance.

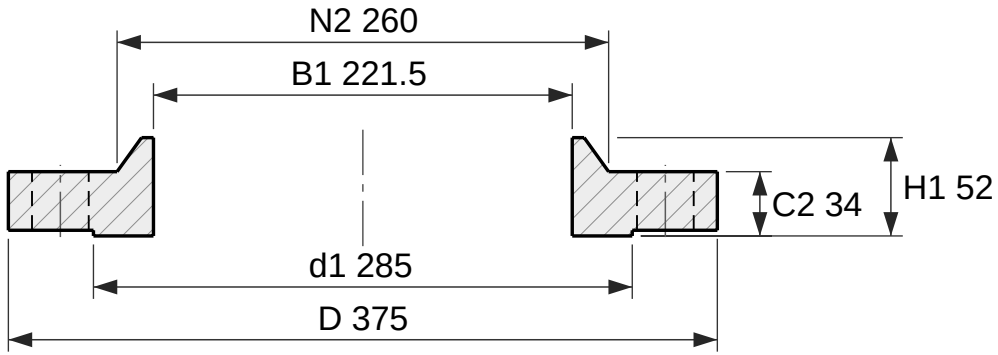

Section

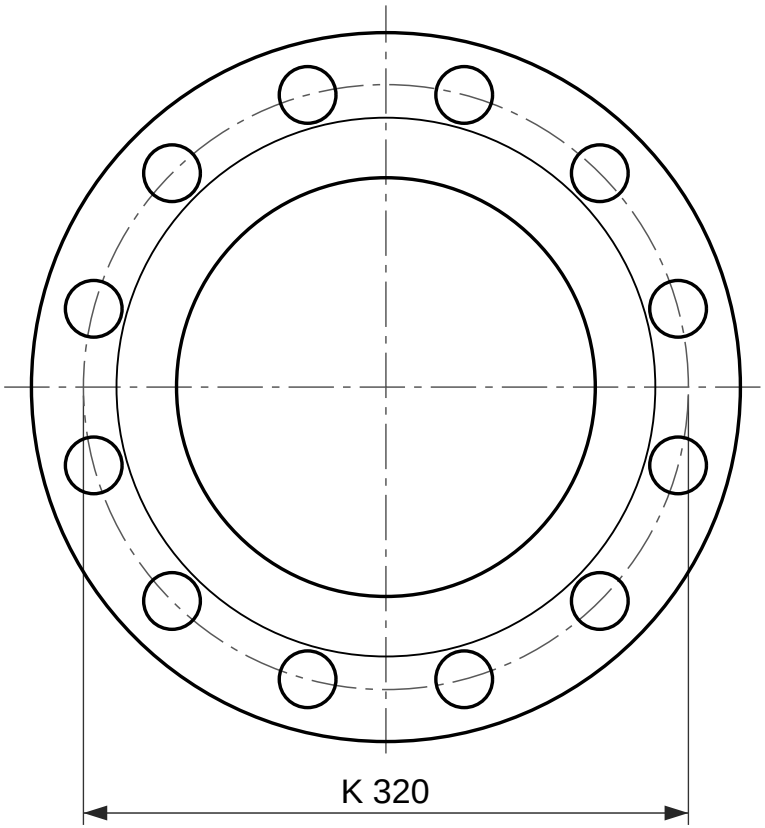

12 holes Ø30

Face view

Hubbed slip-on flange, EN 1092-1 type 12, PN 40

DN 200, facing type B1 (raised face)

Designation: Flange EN 1092-1/12/B1/DN 200/PN 40
Dimensions per EN 1092-1:2018, Table 15 (PN 40) and Table 8 (facing); tolerances per EN 1092-1.
C2 and H1 include the raised face f1, as EN 1092-1 measures it.
EN 1092-1 dimensions the hub of this type at the back face only (N2) and 5.6.2 lets it run parallel or taper up to 7 degrees; it is drawn tapering out to the pipe wall.
Reference drawing. The purchase order and EN 1092-1 govern.
Generated at rajendradatacenter.com/flanges/en-1092-1/

Dimension	mm	in
D Outside diameter	375	14.76
d1 Raised face diameter	285	11.22
f1 Raised face height	3	0.12
C2 Flange thickness, raised face included	34	1.34
H1 Length through hub, raised face included	52	2.05
N2 Hub diameter at back face	260	10.24
B1 Bore	221.5	8.72
K Bolt circle diameter	320	12.60
L Bolt holes, 12 off	30	1.18

12 bolts M27; holes 30 mm (1.18 in)

RAJENDRA INDUSTRIAL CORPORATION
rajendradatacenter.com
Drawing RIC-EN1092-12-PN40-DN200-B1
Scale 1:4 on A4
Units: mm (inches)
Date 2026-11-22
Quote: rajendradatacenter.com/rfq/
sales@rajendradatacenter.com
+91 74338 71355