Approx. weight

Material	kg	lb
Carbon steel	104	229
Stainless steel 304 and 304L	104	230
Stainless steel 316 and 316L	106	233

Densities 7.85, 7.9 and 8.0 g/cm3.
Calculated from the dimensions as the standard gives them, with no allowance for tolerance.

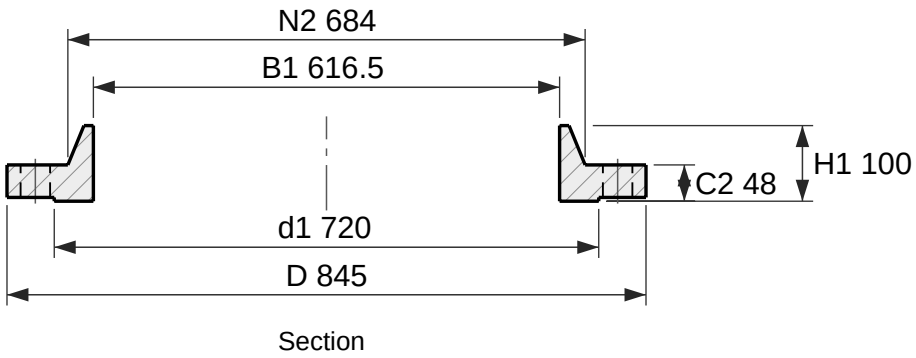

Section

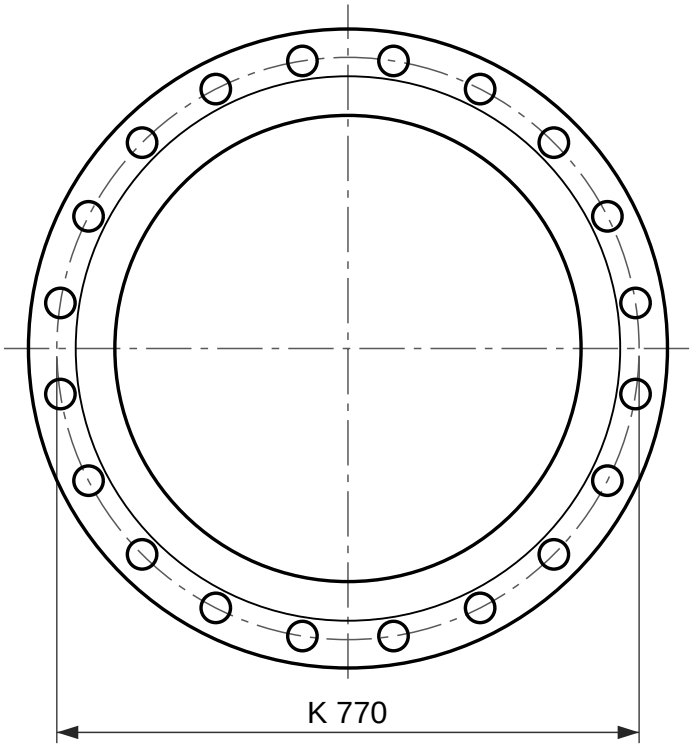

20 holes Ø39

Face view

Hubbed slip-on flange, EN 1092-1 type 12, PN 25

DN 600, facing type B1 (raised face)

Designation: Flange EN 1092-1/12/B1/DN 600/PN 25
Dimensions per EN 1092-1:2018, Table 14 (PN 25) and Table 8 (facing); tolerances per EN 1092-1.
C2 and H1 include the raised face f1, as EN 1092-1 measures it.
EN 1092-1 dimensions the hub of this type at the back face only (N2) and 5.6.2 lets it run parallel or taper up to 7 degrees; it is drawn tapering out to the pipe wall.
Reference drawing. The purchase order and EN 1092-1 govern.
Generated at rajendradatacenter.com/flanges/en-1092-1/

Dimension	mm	in
D Outside diameter	845	33.27
d1 Raised face diameter	720	28.35
f1 Raised face height	5	0.20
C2 Flange thickness, raised face included	48	1.89
H1 Length through hub, raised face included	100	3.94
N2 Hub diameter at back face	684	26.93
B1 Bore	616.5	24.27
K Bolt circle diameter	770	30.31
L Bolt holes, 20 off	39	1.54

20 bolts M36; holes 39 mm (1.54 in)

RAJENDRA INDUSTRIAL CORPORATION
rajendradatacenter.com
Drawing RIC-EN1092-12-PN25-DN600-B1
Scale 1:10 on A4
Units: mm (inches)
Date 2026-11-22
Quote: rajendradatacenter.com/rfq/
sales@rajendradatacenter.com
+91 74338 71355