Approx. weight

Material	kg	lb
Carbon steel	41.6	91.6
Stainless steel 304 and 304L	41.8	92.2
Stainless steel 316 and 316L	42.4	93.4

Densities 7.85, 7.9 and 8.0 g/cm3.
Calculated from the dimensions as the standard gives them, with no allowance for tolerance.

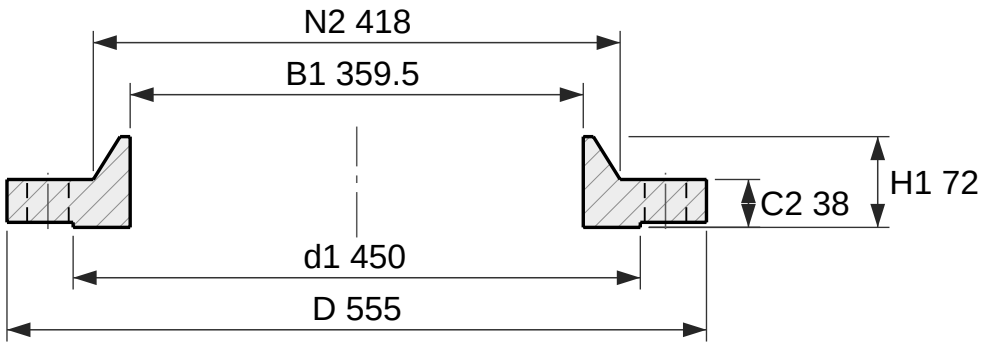

Section

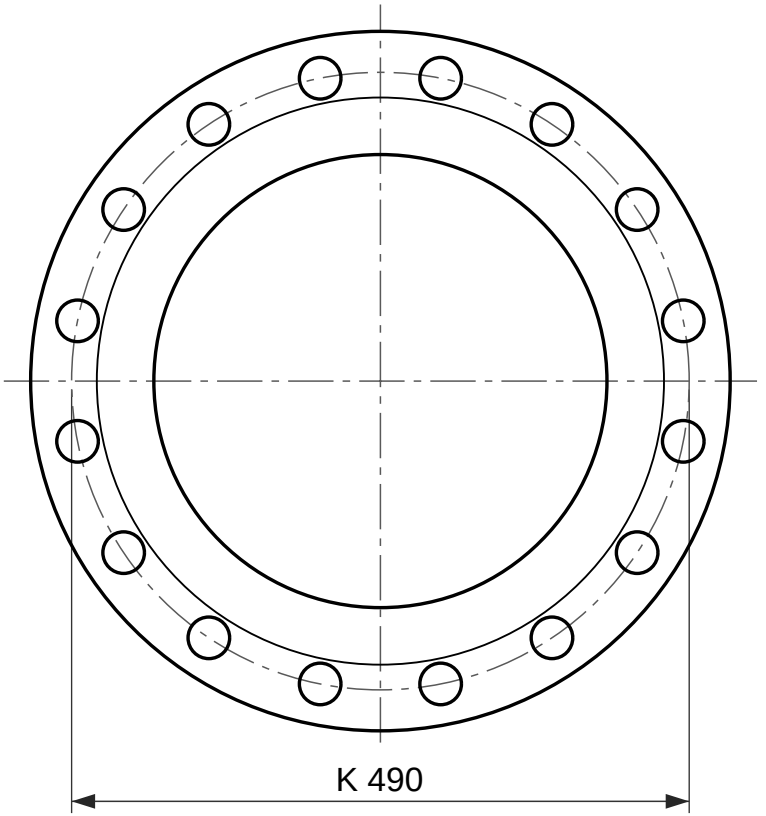

16 holes Ø33

Face view

Hubbed slip-on flange, EN 1092-1 type 12, PN 25

DN 350, facing type B1 (raised face)

Designation: Flange EN 1092-1/12/B1/DN 350/PN 25
Dimensions per EN 1092-1:2018, Table 14 (PN 25) and Table 8 (facing); tolerances per EN 1092-1.
C2 and H1 include the raised face f1, as EN 1092-1 measures it.
EN 1092-1 dimensions the hub of this type at the back face only (N2) and 5.6.2 lets it run parallel or taper up to 7 degrees; it is drawn tapering out to the pipe wall.
Reference drawing. The purchase order and EN 1092-1 govern.
Generated at rajendradatacenter.com/flanges/en-1092-1/

Dimension	mm	in
D Outside diameter	555	21.85
d1 Raised face diameter	450	17.72
f1 Raised face height	4	0.16
C2 Flange thickness, raised face included	38	1.50
H1 Length through hub, raised face included	72	2.83
N2 Hub diameter at back face	418	16.46
B1 Bore	359.5	14.15
K Bolt circle diameter	490	19.29
L Bolt holes, 16 off	33	1.30

16 bolts M30; holes 33 mm (1.30 in)

RAJENDRA INDUSTRIAL CORPORATION
rajendradatacenter.com
Drawing RIC-EN1092-12-PN25-DN350-B1
Scale 1:6 on A4
Units: mm (inches)
Date 2026-11-22
Quote: rajendradatacenter.com/rfq/
sales@rajendradatacenter.com
+91 74338 71355