Approx. weight

Material	kg	lb
Carbon steel	25.9	57.0
Stainless steel 304 and 304L	26.0	57.4
Stainless steel 316 and 316L	26.3	58.1

Densities 7.85, 7.9 and 8.0 g/cm3.
Calculated from the dimensions as the standard gives them, with no allowance for tolerance.

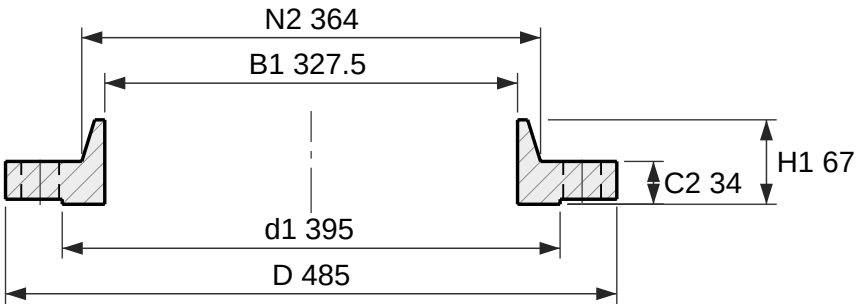

Section

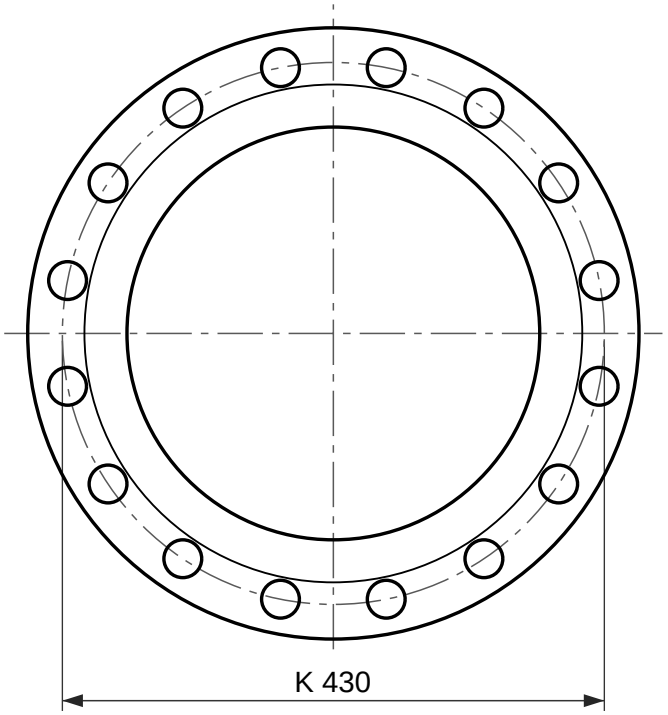

16 holes Ø30

Face view

Hubbed slip-on flange, EN 1092-1 type 12, PN 25

DN 300, facing type B1 (raised face)

Designation: Flange EN 1092-1/12/B1/DN 300/PN 25
Dimensions per EN 1092-1:2018, Table 14 (PN 25) and Table 8 (facing); tolerances per EN 1092-1.
C2 and H1 include the raised face f1, as EN 1092-1 measures it.
EN 1092-1 dimensions the hub of this type at the back face only (N2) and 5.6.2 lets it run parallel or taper up to 7 degrees; it is drawn tapering out to the pipe wall.
Reference drawing. The purchase order and EN 1092-1 govern.
Generated at rajendradatacenter.com/flanges/en-1092-1/

Dimension	mm	in
D Outside diameter	485	19.09
d1 Raised face diameter	395	15.55
f1 Raised face height	4	0.16
C2 Flange thickness, raised face included	34	1.34
H1 Length through hub, raised face included	67	2.64
N2 Hub diameter at back face	364	14.33
B1 Bore	327.5	12.89
K Bolt circle diameter	430	16.93
L Bolt holes, 16 off	30	1.18

16 bolts M27; holes 30 mm (1.18 in)

RAJENDRA INDUSTRIAL CORPORATION
rajendradatacenter.com
Drawing RIC-EN1092-12-PN25-DN300-B1
Scale 1:6 on A4
Units: mm (inches)
Date 2026-11-22
Quote: rajendradatacenter.com/rfq/
sales@rajendradatacenter.com
+91 74338 71355