Approx. weight

Material	kg	lb
Carbon steel	9.9	21.9
Stainless steel 304 and 304L	10.0	22.0
Stainless steel 316 and 316L	10.1	22.3

Densities 7.85, 7.9 and 8.0 g/cm3.
Calculated from the dimensions as the standard gives them, with no allowance for tolerance.

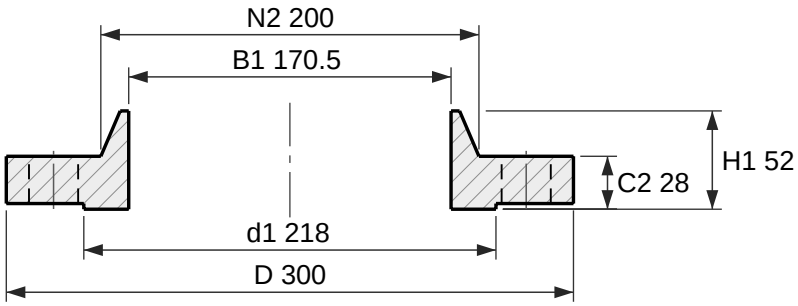

Section

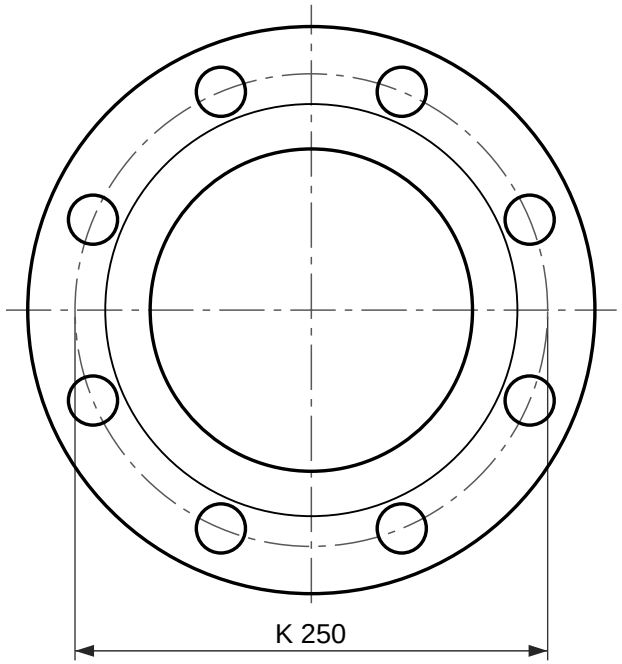

8 holes Ø26
Face view

Hubbed slip-on flange, EN 1092-1 type 12, PN 25

DN 150, facing type B1 (raised face)

Designation: Flange EN 1092-1/12/B1/DN 150/PN 25
Dimensions per EN 1092-1:2018, Table 14 (PN 25) and Table 8 (facing); tolerances per EN 1092-1.
C2 and H1 include the raised face f1, as EN 1092-1 measures it.
EN 1092-1 dimensions the hub of this type at the back face only (N2) and 5.6.2 lets it run parallel or taper up to 7 degrees; it is drawn tapering out to the pipe wall.
EN 1092-1 gives PN 25 the same dimensions as PN 40 in DN 150; only the marking differs.
Reference drawing. The purchase order and EN 1092-1 govern.
Generated at rajendradatacenter.com/flanges/en-1092-1/

Dimension	mm	in
D Outside diameter	300	11.81
d1 Raised face diameter	218	8.58
f1 Raised face height	3	0.12
C2 Flange thickness, raised face included	28	1.10
H1 Length through hub, raised face included	52	2.05
N2 Hub diameter at back face	200	7.87
B1 Bore	170.5	6.71
K Bolt circle diameter	250	9.84
L Bolt holes, 8 off	26	1.02

8 bolts M24; holes 26 mm (1.02 in)

RAJENDRA INDUSTRIAL CORPORATION
rajendradatacenter.com
Drawing RIC-EN1092-12-PN25-DN150-B1
Scale 1:4 on A4
Units: mm (inches)
Date 2026-11-22
Quote: rajendradatacenter.com/rfq/
sales@rajendradatacenter.com
+91 74338 71355