Approx. weight

Material	kg	lb
Carbon steel	1.0	2.2
Stainless steel 304 and 304L	1.0	2.2
Stainless steel 316 and 316L	1.0	2.3

Densities 7.85, 7.9 and 8.0 g/cm3.
Calculated from the dimensions as the standard gives them, with no allowance for tolerance.

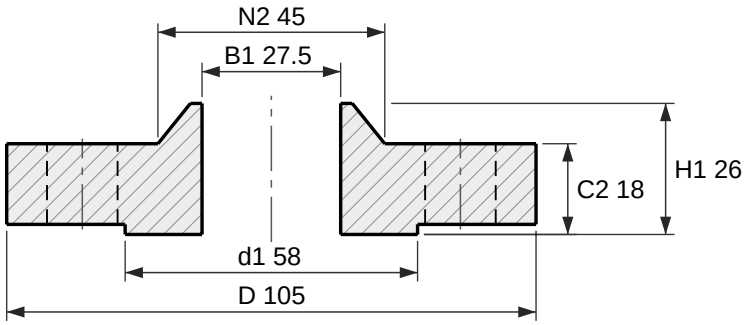

Section

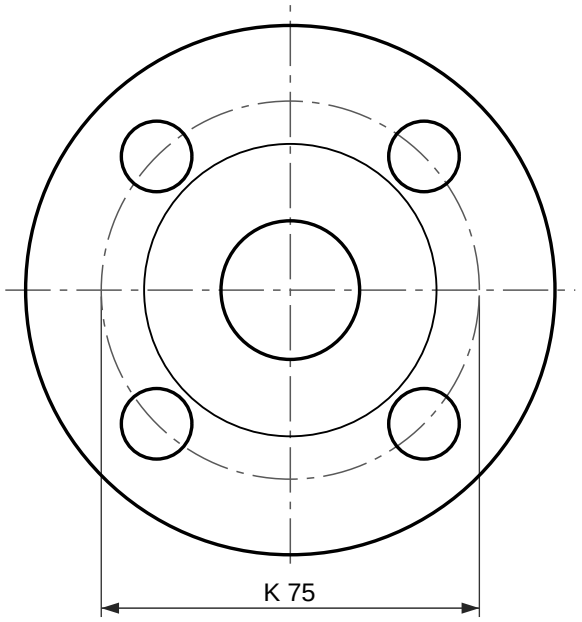

4 holes Ø14

Face view

Hubbed slip-on flange, EN 1092-1 type 12, PN 16

DN 20, facing type B1 (raised face)

Designation: Flange EN 1092-1/12/B1/DN 20/PN 16
Dimensions per EN 1092-1:2018, Table 13 (PN 16) and Table 8 (facing); tolerances per EN 1092-1.
C2 and H1 include the raised face f1, as EN 1092-1 measures it.
EN 1092-1 dimensions the hub of this type at the back face only (N2) and 5.6.2 lets it run parallel or taper up to 7 degrees; it is drawn tapering out to the pipe wall.
EN 1092-1 gives PN 16 the same dimensions as PN 10, PN 25, PN 40 in DN 20; only the marking differs.
Reference drawing. The purchase order and EN 1092-1 govern.
Generated at rajendradatacenter.com/flanges/en-1092-1/

Dimension	mm	in
D Outside diameter	105	4.13
d1 Raised face diameter	58	2.28
f1 Raised face height	2	0.08
C2 Flange thickness, raised face included	18	0.71
H1 Length through hub, raised face included	26	1.02
N2 Hub diameter at back face	45	1.77
B1 Bore	27.5	1.08
K Bolt circle diameter	75	2.95
L Bolt holes, 4 off	14	0.55

4 bolts M12; holes 14 mm (0.55 in)

RAJENDRA INDUSTRIAL CORPORATION
rajendradatacenter.com
Drawing RIC-EN1092-12-PN16-DN20-B1
Scale 1:1.5 on A4
Units: mm (inches)
Date 2026-11-22
Quote: rajendradatacenter.com/rfq/
sales@rajendradatacenter.com
+91 74338 71355