**Approx. weight**

| Material | kg | lb |
|---|---|---|
| Carbon steel | 0.7 | 1.6 |
| Stainless steel 304 and 304L | 0.7 | 1.6 |
| Stainless steel 316 and 316L | 0.7 | 1.6 |

Densities 7.85, 7.9 and 8.0 g/cm3.
Calculated from the dimensions as the standard gives them, with no allowance for tolerance.

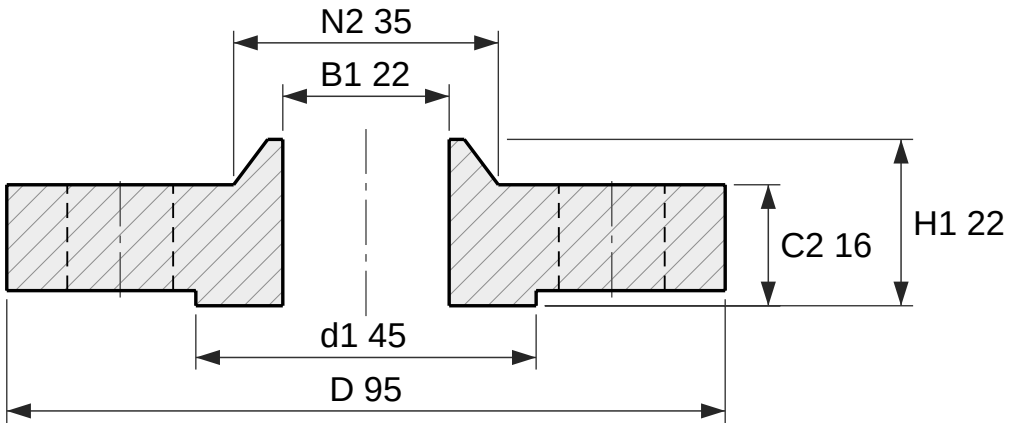


Section

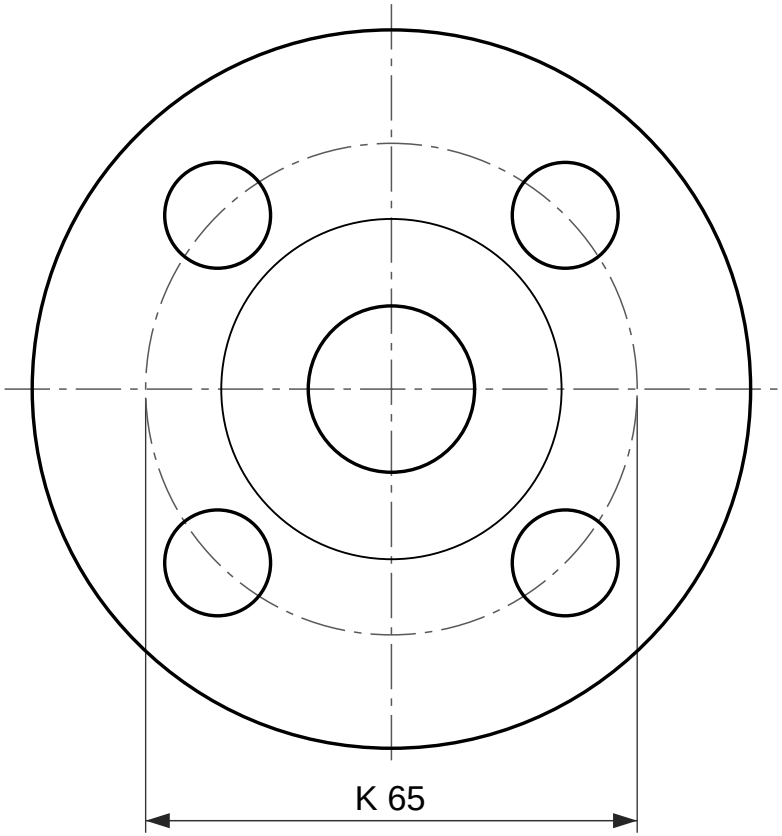


4 holes Ø14

Face view

# Hubbed slip-on flange, EN 1092-1 type 12, PN 16

DN 15, facing type B1 (raised face)

Designation: Flange EN 1092-1/12/B1/DN 15/PN 16
Dimensions per EN 1092-1:2018, Table 13 (PN 16) and Table 8 (facing); tolerances per EN 1092-1.
C2 and H1 include the raised face f1, as EN 1092-1 measures it.
EN 1092-1 dimensions the hub of this type at the back face only (N2) and 5.6.2 lets it run parallel or taper up to 7 degrees; it is drawn tapering out to the pipe wall.
EN 1092-1 gives PN 16 the same dimensions as PN 10, PN 25, PN 40 in DN 15; only the marking differs.
Reference drawing. The purchase order and EN 1092-1 govern.
Generated at rajendradatacenter.com/flanges/en-1092-1/

| Dimension | mm | in |
|---|---|---|
| D Outside diameter | 95 | 3.74 |
| d1 Raised face diameter | 45 | 1.77 |
| f1 Raised face height | 2 | 0.08 |
| C2 Flange thickness, raised face included | 16 | 0.63 |
| H1 Length through hub, raised face included | 22 | 0.87 |
| N2 Hub diameter at back face | 35 | 1.38 |
| B1 Bore | 22 | 0.87 |
| K Bolt circle diameter | 65 | 2.56 |
| L Bolt holes, 4 off | 14 | 0.55 |

4 bolts M12; holes 14 mm (0.55 in)

RAJENDRA INDUSTRIAL CORPORATION
rajendradatacenter.com
Drawing RIC-EN1092-12-PN16-DN15-B1
Scale 1:1 on A4
Units: mm (inches)
Date 2026-11-22
Quote: rajendradatacenter.com/rfq/
sales@rajendradatacenter.com
+91 74338 71355