**Approx. weight**

| Material | kg | lb |
|---|---|---|
| Carbon steel | 5.7 | 12.5 |
| Stainless steel 304 and 304L | 5.7 | 12.6 |
| Stainless steel 316 and 316L | 5.8 | 12.7 |

Densities 7.85, 7.9 and 8.0 g/cm3.
Calculated from the dimensions as the standard gives them, with no allowance for tolerance.

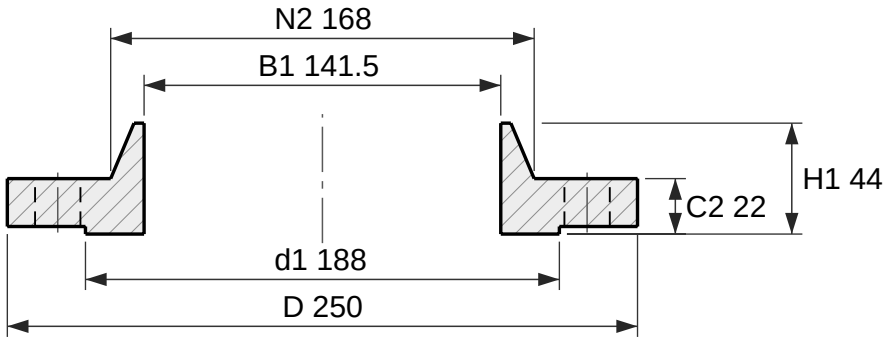

Section

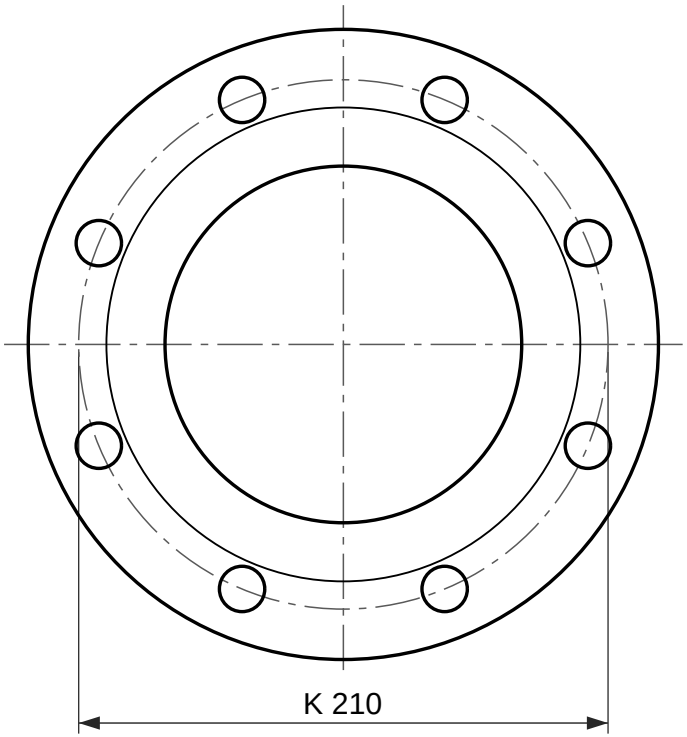

8 holes Ø18

Face view

# Hubbed slip-on flange, EN 1092-1 type 12, PN 16

DN 125, facing type B1 (raised face)

Designation: Flange EN 1092-1/12/B1/DN 125/PN 16
Dimensions per EN 1092-1:2018, Table 13 (PN 16) and Table 8 (facing); tolerances per EN 1092-1.
C2 and H1 include the raised face f1, as EN 1092-1 measures it.
EN 1092-1 dimensions the hub of this type at the back face only (N2) and 5.6.2 lets it run parallel or taper up to 7 degrees; it is drawn tapering out to the pipe wall.
EN 1092-1 gives PN 16 the same dimensions as PN 10 in DN 125; only the marking differs.
Reference drawing. The purchase order and EN 1092-1 govern.
Generated at rajendradatacenter.com/flanges/en-1092-1/

| Dimension | mm | in |
|---|---|---|
| D Outside diameter | 250 | 9.84 |
| d1 Raised face diameter | 188 | 7.40 |
| f1 Raised face height | 3 | 0.12 |
| C2 Flange thickness, raised face included | 22 | 0.87 |
| H1 Length through hub, raised face included | 44 | 1.73 |
| N2 Hub diameter at back face | 168 | 6.61 |
| B1 Bore | 141.5 | 5.57 |
| K Bolt circle diameter | 210 | 8.27 |
| L Bolt holes, 8 off | 18 | 0.71 |

8 bolts M16; holes 18 mm (0.71 in)

RAJENDRA INDUSTRIAL CORPORATION
rajendradatacenter.com
Drawing RIC-EN1092-12-PN16-DN125-B1
Scale 1:3 on A4
Units: mm (inches)
Date 2026-11-22
Quote: rajendradatacenter.com/rfq/
sales@rajendradatacenter.com
+91 74338 71355