Approx. weight

Material	kg	lb
Carbon steel	22.8	50.3
Stainless steel 304 and 304L	23.0	50.7
Stainless steel 316 and 316L	23.3	51.3

Densities 7.85, 7.9 and 8.0 g/cm3.
Calculated from the dimensions as the standard gives them, with no allowance for tolerance.

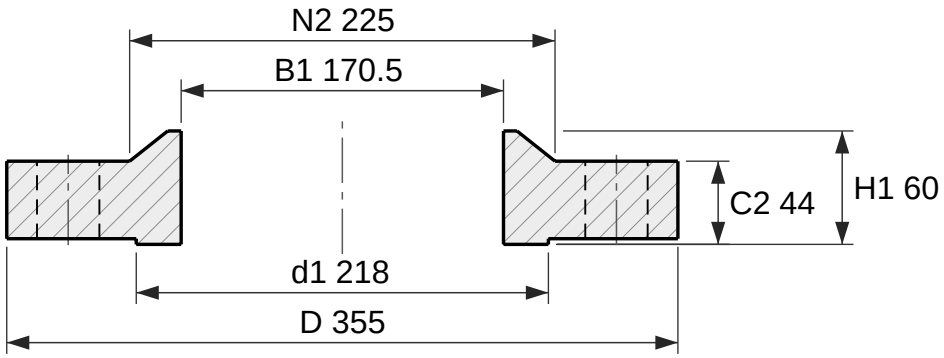

Section

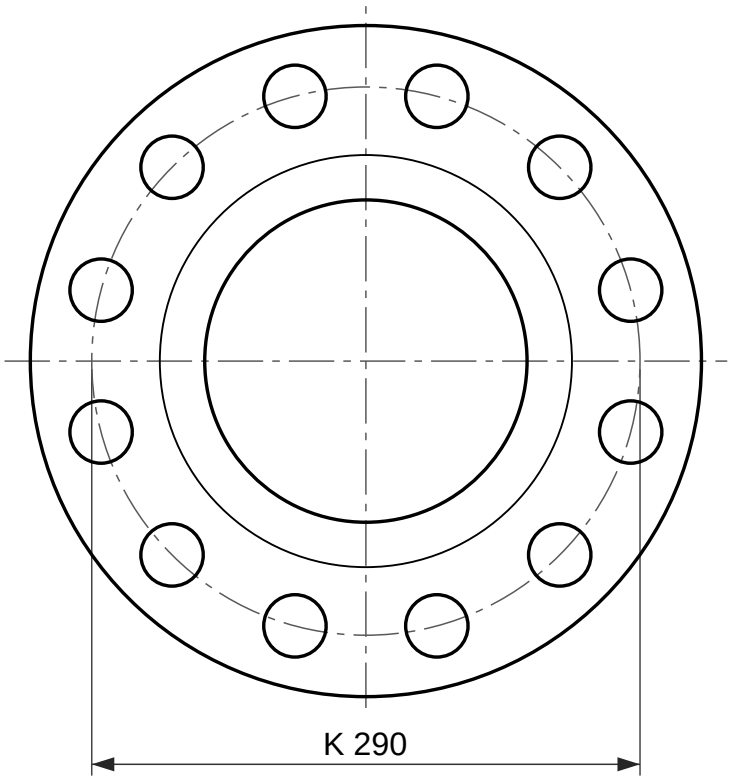

12 holes Ø33

Face view

Hubbed slip-on flange, EN 1092-1 type 12, PN 100

DN 150, facing type B1 (raised face)

Designation: Flange EN 1092-1/12/B1/DN 150/PN 100
Dimensions per EN 1092-1:2018, Table 17 (PN 100) and Table 8 (facing); tolerances per EN 1092-1.
C2 and H1 include the raised face f1, as EN 1092-1 measures it.
EN 1092-1 dimensions the hub of this type at the back face only (N2) and 5.6.2 lets it run parallel or taper up to 7 degrees; it is drawn tapering out to the pipe wall.
Reference drawing. The purchase order and EN 1092-1 govern.
Generated at rajendradatacenter.com/flanges/en-1092-1/

Dimension	mm	in
D Outside diameter	355	13.98
d1 Raised face diameter	218	8.58
f1 Raised face height	3	0.12
C2 Flange thickness, raised face included	44	1.73
H1 Length through hub, raised face included	60	2.36
N2 Hub diameter at back face	225	8.86
B1 Bore	170.5	6.71
K Bolt circle diameter	290	11.42
L Bolt holes, 12 off	33	1.30

12 bolts M30; holes 33 mm (1.30 in)

RAJENDRA INDUSTRIAL CORPORATION
rajendradatacenter.com
Drawing RIC-EN1092-12-PN100-DN150-B1
Scale 1:4 on A4
Units: mm (inches)
Date 2026-11-22
Quote: rajendradatacenter.com/rfq/
sales@rajendradatacenter.com
+91 74338 71355