Approx. weight

Material	kg	lb
Carbon steel	34.9	77.0
Stainless steel 304 and 304L	35.2	77.5
Stainless steel 316 and 316L	35.6	78.5

Densities 7.85, 7.9 and 8.0 g/cm3.
Calculated from the dimensions as the standard gives them, with no allowance for tolerance.

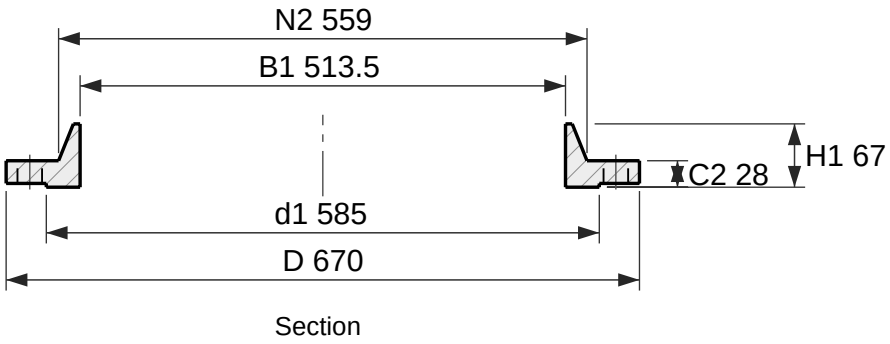

Section

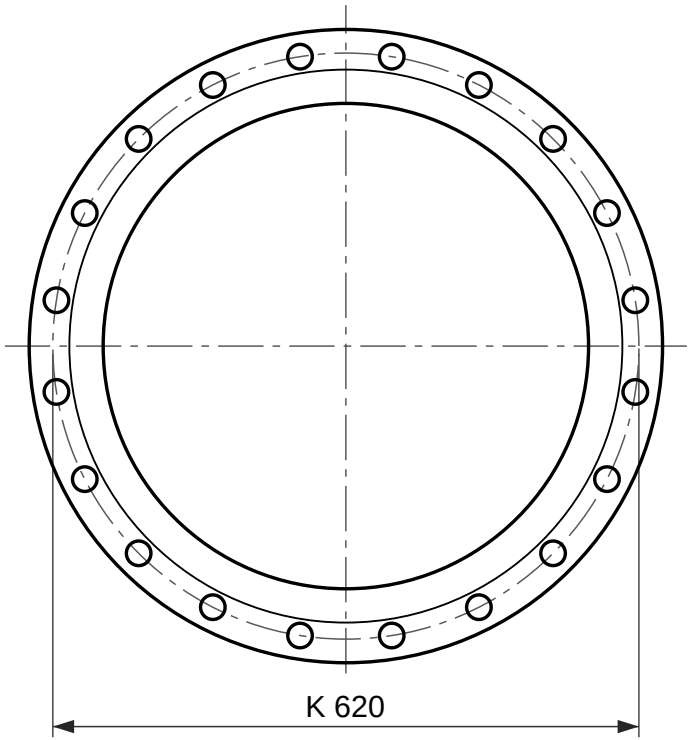

20 holes Ø26

Face view

Hubbed slip-on flange, EN 1092-1 type 12, PN 10

DN 500, facing type B1 (raised face)

Designation: Flange EN 1092-1/12/B1/DN 500/PN 10
Dimensions per EN 1092-1:2018, Table 12 (PN 10) and Table 8 (facing); tolerances per EN 1092-1.
C2 and H1 include the raised face f1, as EN 1092-1 measures it.
EN 1092-1 dimensions the hub of this type at the back face only (N2) and 5.6.2 lets it run parallel or taper up to 7 degrees; it is drawn tapering out to the pipe wall.
Reference drawing. The purchase order and EN 1092-1 govern.
Generated at rajendradatacenter.com/flanges/en-1092-1/

Dimension	mm	in
D Outside diameter	670	26.38
d1 Raised face diameter	585	23.03
f1 Raised face height	4	0.16
C2 Flange thickness, raised face included	28	1.10
H1 Length through hub, raised face included	67	2.64
N2 Hub diameter at back face	559	22.01
B1 Bore	513.5	20.22
K Bolt circle diameter	620	24.41
L Bolt holes, 20 off	26	1.02

20 bolts M24; holes 26 mm (1.02 in)

RAJENDRA INDUSTRIAL CORPORATION
rajendradatacenter.com
Drawing RIC-EN1092-12-PN10-DN500-B1
Scale 1:8 on A4
Units: mm (inches)
Date 2026-11-22
Quote: rajendradatacenter.com/rfq/
sales@rajendradatacenter.com
+91 74338 71355