**Approx. weight**

| Material | kg | lb |
|---|---|---|
| Carbon steel | 13.8 | 30.4 |
| Stainless steel 304 and 304L | 13.9 | 30.6 |
| Stainless steel 316 and 316L | 14.0 | 31.0 |

Densities 7.85, 7.9 and 8.0 g/cm3.
Calculated from the dimensions as the standard gives them, with no allowance for tolerance.

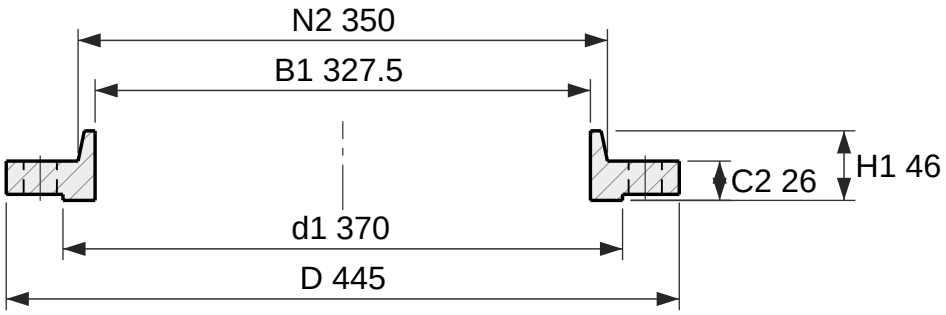


Section

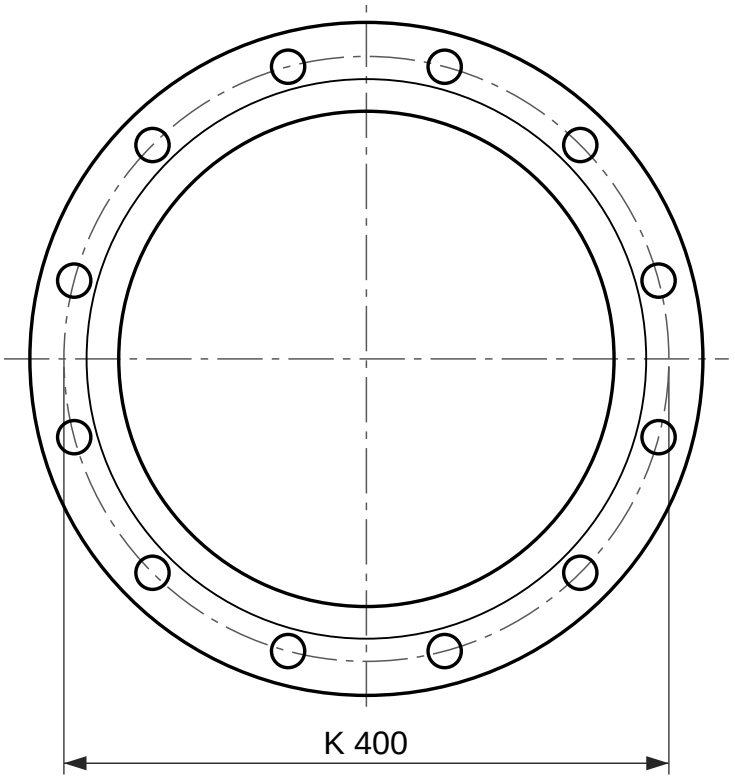


12 holes Ø22

Face view

# Hubbed slip-on flange, EN 1092-1 type 12, PN 10

DN 300, facing type B1 (raised face)

Designation: Flange EN 1092-1/12/B1/DN 300/PN 10
Dimensions per EN 1092-1:2018, Table 12 (PN 10) and Table 8 (facing); tolerances per EN 1092-1.
C2 and H1 include the raised face f1, as EN 1092-1 measures it.
EN 1092-1 dimensions the hub of this type at the back face only (N2) and 5.6.2 lets it run parallel or taper up to 7 degrees; it is drawn tapering out to the pipe wall.
Reference drawing. The purchase order and EN 1092-1 govern.
Generated at rajendradatacenter.com/flanges/en-1092-1/

| Dimension | mm | in |
|---|---|---|
| D Outside diameter | 445 | 17.52 |
| d1 Raised face diameter | 370 | 14.57 |
| f1 Raised face height | 4 | 0.16 |
| C2 Flange thickness, raised face included | 26 | 1.02 |
| H1 Length through hub, raised face included | 46 | 1.81 |
| N2 Hub diameter at back face | 350 | 13.78 |
| B1 Bore | 327.5 | 12.89 |
| K Bolt circle diameter | 400 | 15.75 |
| L Bolt holes, 12 off | 22 | 0.87 |

12 bolts M20; holes 22 mm (0.87 in)

RAJENDRA INDUSTRIAL CORPORATION
rajendradatacenter.com
Drawing RIC-EN1092-12-PN10-DN300-B1
Scale 1:5 on A4
Units: mm (inches)
Date 2026-11-22
Quote: rajendradatacenter.com/rfq/
sales@rajendradatacenter.com
+91 74338 71355