Approx. weight

Material	kg	lb
Carbon steel	5.5	12.1
Stainless steel 304 and 304L	5.5	12.2
Stainless steel 316 and 316L	5.6	12.3

Densities 7.85, 7.9 and 8.0 g/cm3.
Calculated from the dimensions as the standard gives them, with no allowance for tolerance.

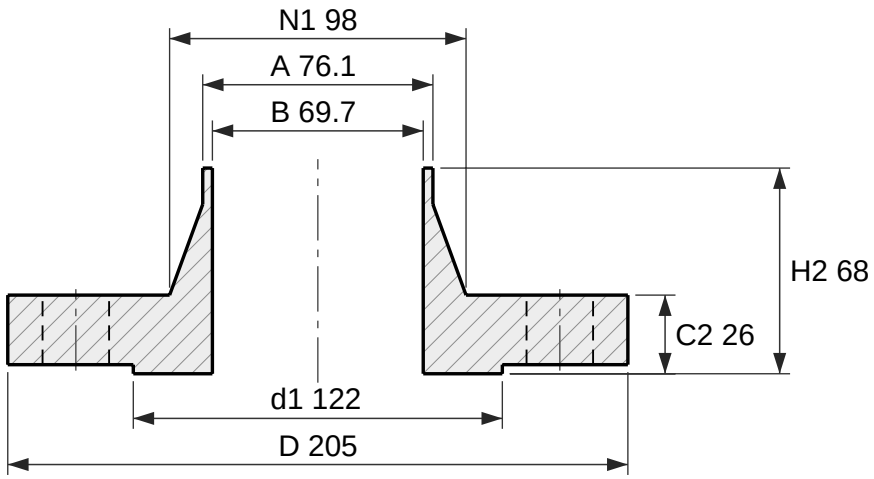

Section

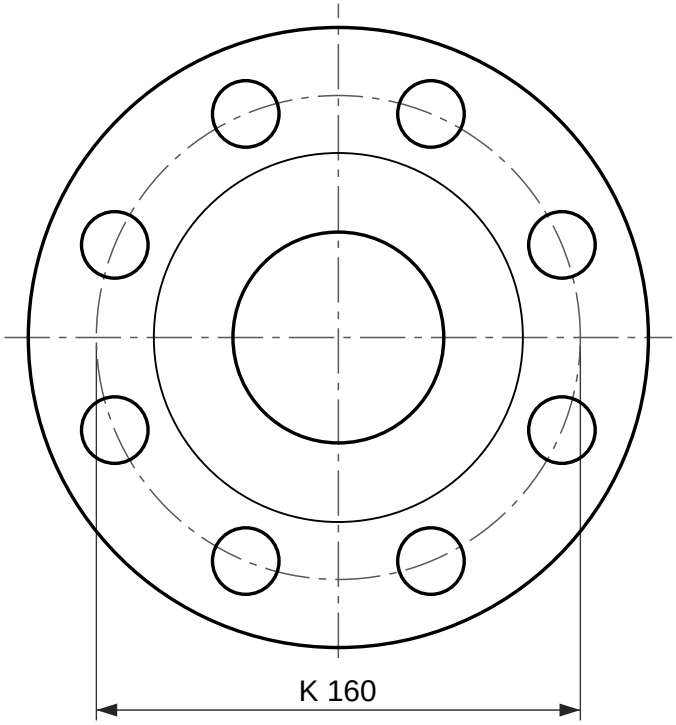

8 holes Ø22
Face view

Weld neck flange, EN 1092-1 type 11, PN 63

DN 65, facing type B1 (raised face), neck 76.1 × 3.2

Designation: Flange EN 1092-1/11/B1/DN 65/PN 63
Dimensions per EN 1092-1:2018, Table 16 (PN 63) and Table 8 (facing) and Annex A (wall thickness); tolerances per EN 1092-1.
C2 and H2 include the raised face f1, as EN 1092-1 measures it.
S is the minimum neck wall, from Annex A Table A.1; drawn at 3.2 mm. State the pipe wall in the order (for example DN 65 × 3.2).
Reference drawing. The purchase order and EN 1092-1 govern.
Generated at rajendradatacenter.com/flanges/en-1092-1/

Dimension	mm	in
D Outside diameter	205	8.07
d1 Raised face diameter	122	4.80
f1 Raised face height	3	0.12
C2 Flange thickness, raised face included	26	1.02
H2 Length through hub, raised face included	68	2.68
N1 Hub diameter at back face	98	3.86
A Neck outside diameter (pipe OD)	76.1	3.00
S Neck wall thickness (min)	3.2	0.13
B Bore, A - 2S	69.7	2.74
K Bolt circle diameter	160	6.30
L Bolt holes, 8 off	22	0.87

8 bolts M20; holes 22 mm (0.87 in)

RAJENDRA INDUSTRIAL CORPORATION
rajendradatacenter.com
Drawing RIC-EN1092-11-PN63-DN65-B1
Scale 1:2.5 on A4
Units: mm (inches)
Date 2026-11-22
Quote: rajendradatacenter.com/rfq/
sales@rajendradatacenter.com
+91 74338 71355