Approx. weight

Material	kg	lb
Carbon steel	128	282
Stainless steel 304 and 304L	129	283
Stainless steel 316 and 316L	130	287

Densities 7.85, 7.9 and 8.0 g/cm3.
Calculated from the dimensions as the standard gives them, with no allowance for tolerance.

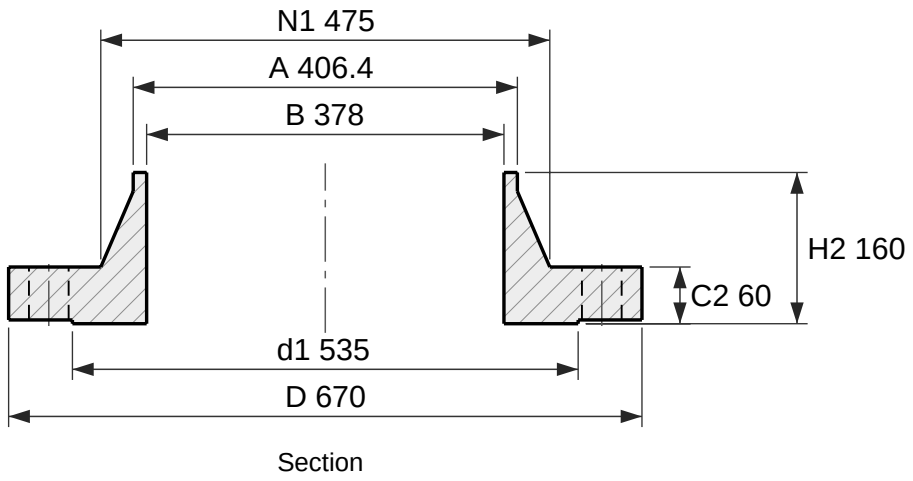

Section

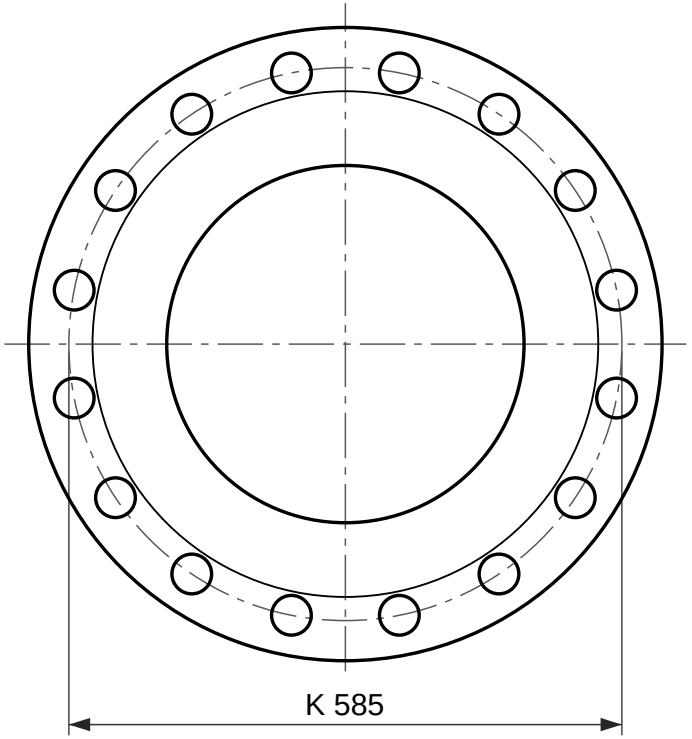

16 holes Ø42

Face view

Weld neck flange, EN 1092-1 type 11, PN 63

DN 400, facing type B1 (raised face), neck 406.4 × 14.2

Designation: Flange EN 1092-1/11/B1/DN 400/PN 63
Dimensions per EN 1092-1:2018, Table 16 (PN 63) and Table 8 (facing) and Annex A (wall thickness); tolerances per EN 1092-1.
C2 and H2 include the raised face f1, as EN 1092-1 measures it.
S is the minimum neck wall, from Annex A Table A.1; drawn at 14.2 mm. State the pipe wall in the order (for example DN 400 × 14.2).
Reference drawing. The purchase order and EN 1092-1 govern.
Generated at rajendradatacenter.com/flanges/en-1092-1/

Dimension	mm	in
D Outside diameter	670	26.38
d1 Raised face diameter	535	21.06
f1 Raised face height	4	0.16
C2 Flange thickness, raised face included	60	2.36
H2 Length through hub, raised face included	160	6.30
N1 Hub diameter at back face	475	18.70
A Neck outside diameter (pipe OD)	406.4	16.00
S Neck wall thickness (min)	14.2	0.56
B Bore, A - 2S	378	14.88
K Bolt circle diameter	585	23.03
L Bolt holes, 16 off	42	1.65

16 bolts M39; holes 42 mm (1.65 in)

RAJENDRA INDUSTRIAL CORPORATION
rajendradatacenter.com
Drawing RIC-EN1092-11-PN63-DN400-B1
Scale 1:8 on A4
Units: mm (inches)
Date 2026-11-22
Quote: rajendradatacenter.com/rfq/
sales@rajendradatacenter.com
+91 74338 71355