**Approx. weight**

| Material | kg | lb |
|---|---|---|
| Carbon steel | 4.0 | 8.8 |
| Stainless steel 304 and 304L | 4.0 | 8.8 |
| Stainless steel 316 and 316L | 4.1 | 9.0 |

Densities 7.85, 7.9 and 8.0 g/cm3.
Calculated from the dimensions as the standard gives them, with no allowance for tolerance.

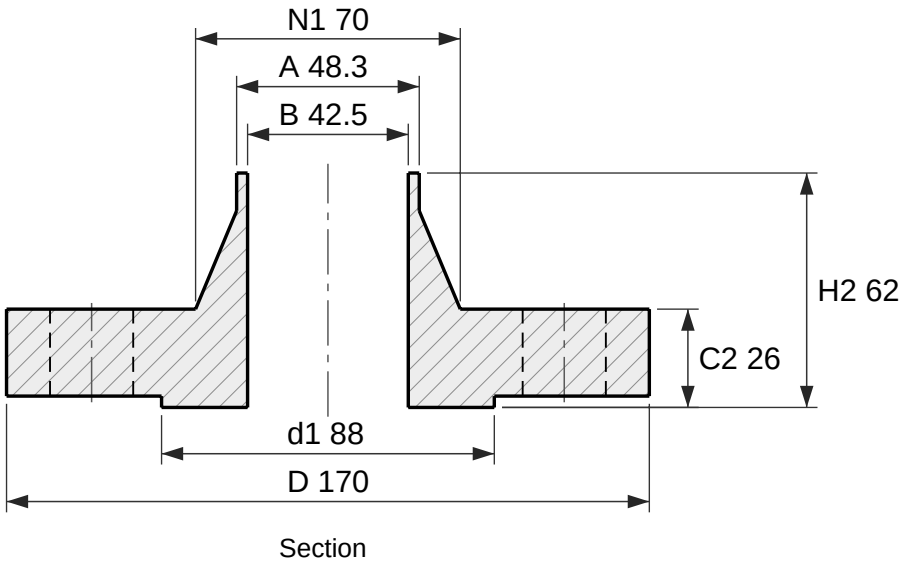


Section

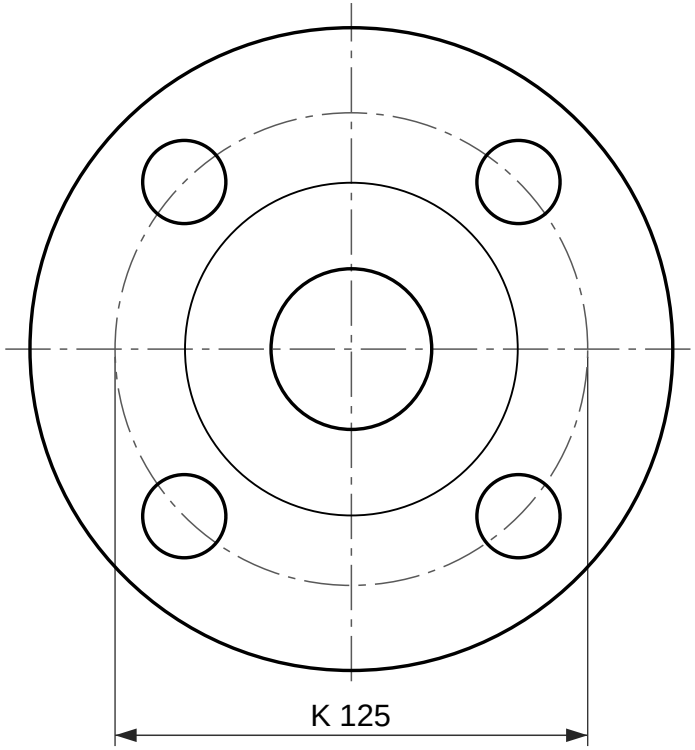


4 holes Ø22

Face view

# Weld neck flange, EN 1092-1 type 11, PN 63

DN 40, facing type B1 (raised face), neck 48.3 × 2.9

Designation: Flange EN 1092-1/11/B1/DN 40/PN 63
Dimensions per EN 1092-1:2018, Table 16 (PN 63) and Table 8 (facing) and Annex A (wall thickness); tolerances per EN 1092-1.
C2 and H2 include the raised face f1, as EN 1092-1 measures it.
S is the minimum neck wall, from Annex A Table A.1; drawn at 2.9 mm. State the pipe wall in the order (for example DN 40 × 2.9).
EN 1092-1 gives PN 63 the same dimensions as PN 100 in DN 40; only the marking differs.
Reference drawing. The purchase order and EN 1092-1 govern.
Generated at rajendradatacenter.com/flanges/en-1092-1/

| Dimension | mm | in |
|---|---|---|
| D Outside diameter | 170 | 6.69 |
| d1 Raised face diameter | 88 | 3.46 |
| f1 Raised face height | 3 | 0.12 |
| C2 Flange thickness, raised face included | 26 | 1.02 |
| H2 Length through hub, raised face included | 62 | 2.44 |
| N1 Hub diameter at back face | 70 | 2.76 |
| A Neck outside diameter (pipe OD) | 48.3 | 1.90 |
| S Neck wall thickness (min) | 2.9 | 0.11 |
| B Bore, A - 2S | 42.5 | 1.67 |
| K Bolt circle diameter | 125 | 4.92 |
| L Bolt holes, 4 off | 22 | 0.87 |

4 bolts M20; holes 22 mm (0.87 in)

RAJENDRA INDUSTRIAL CORPORATION
rajendradatacenter.com
Drawing RIC-EN1092-11-PN63-DN40-B1
Scale 1:2 on A4
Units: mm (inches)
Date 2026-11-22
Quote: rajendradatacenter.com/rfq/
sales@rajendradatacenter.com
+91 74338 71355