Approx. weight

Material	kg	lb
Carbon steel	66.4	146
Stainless steel 304 and 304L	66.9	147
Stainless steel 316 and 316L	67.7	149

Densities 7.85, 7.9 and 8.0 g/cm3.
Calculated from the dimensions as the standard gives them, with no allowance for tolerance.

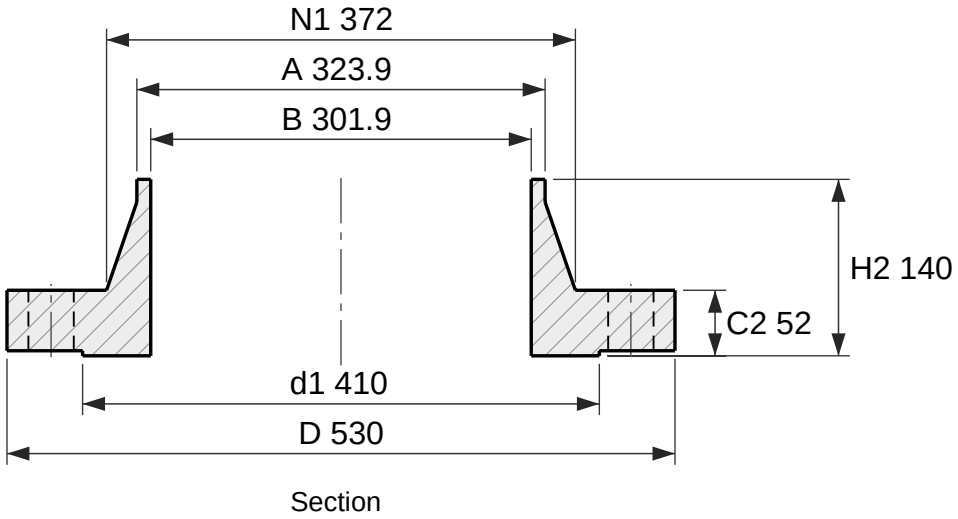

Section

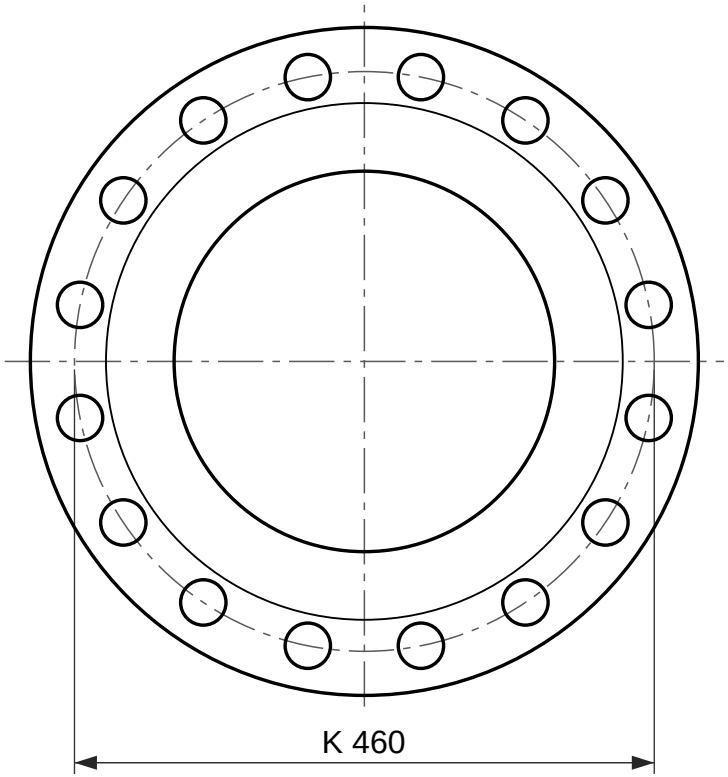

16 holes Ø36

Face view

Weld neck flange, EN 1092-1 type 11, PN 63

DN 300, facing type B1 (raised face), neck 323.9 × 11

Designation: Flange EN 1092-1/11/B1/DN 300/PN 63
Dimensions per EN 1092-1:2018, Table 16 (PN 63) and Table 8 (facing) and Annex A (wall thickness); tolerances per EN 1092-1.
C2 and H2 include the raised face f1, as EN 1092-1 measures it.
S is the minimum neck wall, from Annex A Table A.1; drawn at 11 mm. State the pipe wall in the order (for example DN 300 × 11).
Reference drawing. The purchase order and EN 1092-1 govern.
Generated at rajendradatacenter.com/flanges/en-1092-1/

Dimension	mm	in
D Outside diameter	530	20.87
d1 Raised face diameter	410	16.14
f1 Raised face height	4	0.16
C2 Flange thickness, raised face included	52	2.05
H2 Length through hub, raised face included	140	5.51
N1 Hub diameter at back face	372	14.65
A Neck outside diameter (pipe OD)	323.9	12.75
S Neck wall thickness (min)	11	0.43
B Bore, A - 2S	301.9	11.89
K Bolt circle diameter	460	18.11
L Bolt holes, 16 off	36	1.42

16 bolts M33; holes 36 mm (1.42 in)

RAJENDRA INDUSTRIAL CORPORATION
rajendradatacenter.com
Drawing RIC-EN1092-11-PN63-DN300-B1
Scale 1:6 on A4
Units: mm (inches)
Date 2026-11-22
Quote: rajendradatacenter.com/rfq/
sales@rajendradatacenter.com
+91 74338 71355