Approx. weight

Material	kg	lb
Carbon steel	20.9	46.1
Stainless steel 304 and 304L	21.1	46.4
Stainless steel 316 and 316L	21.3	47.0

Densities 7.85, 7.9 and 8.0 g/cm3.
Calculated from the dimensions as the standard gives them, with no allowance for tolerance.

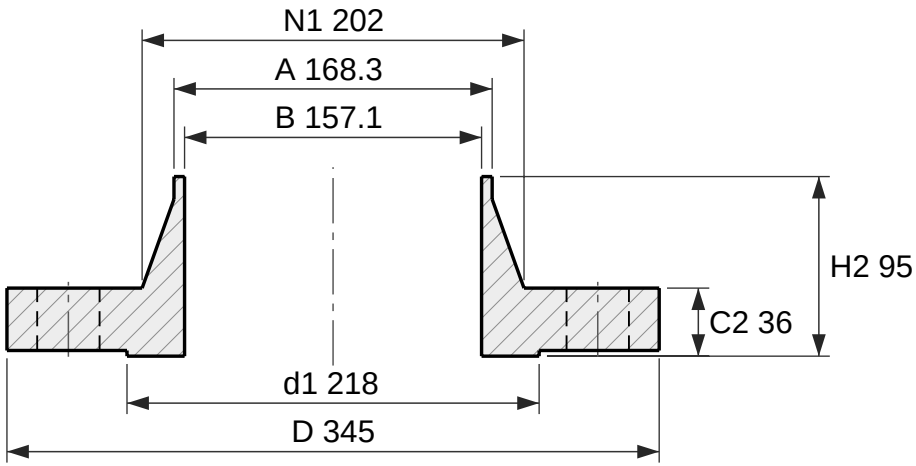

Section

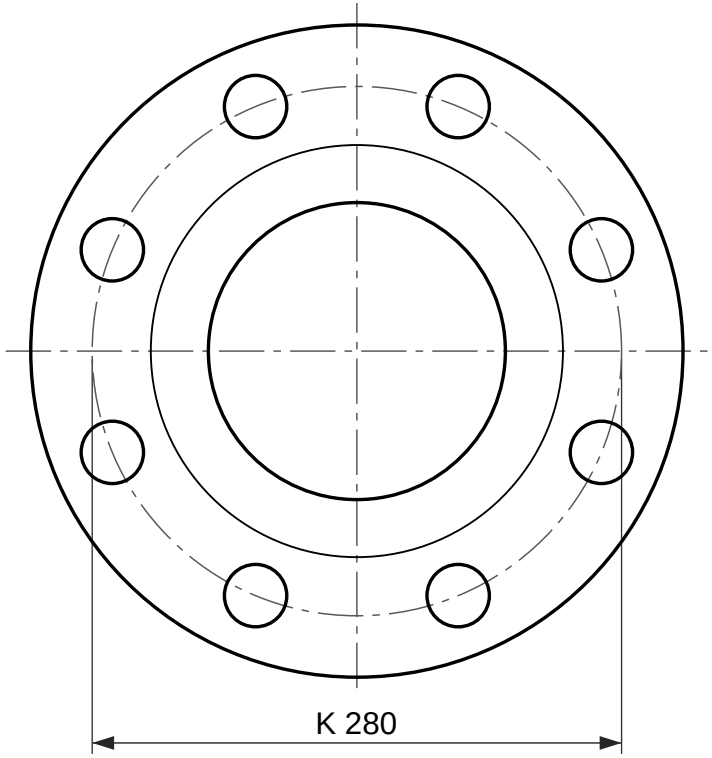

8 holes Ø33

Face view

Weld neck flange, EN 1092-1 type 11, PN 63

DN 150, facing type B1 (raised face), neck 168.3 × 5.6

Designation: Flange EN 1092-1/11/B1/DN 150/PN 63
Dimensions per EN 1092-1:2018, Table 16 (PN 63) and Table 8 (facing) and Annex A (wall thickness); tolerances per EN 1092-1.
C2 and H2 include the raised face f1, as EN 1092-1 measures it.
S is the minimum neck wall, from Annex A Table A.1; drawn at 5.6 mm. State the pipe wall in the order (for example DN 150 × 5.6).
Reference drawing. The purchase order and EN 1092-1 govern.
Generated at rajendradatacenter.com/flanges/en-1092-1/

Dimension	mm	in
D Outside diameter	345	13.58
d1 Raised face diameter	218	8.58
f1 Raised face height	3	0.12
C2 Flange thickness, raised face included	36	1.42
H2 Length through hub, raised face included	95	3.74
N1 Hub diameter at back face	202	7.95
A Neck outside diameter (pipe OD)	168.3	6.63
S Neck wall thickness (min)	5.6	0.22
B Bore, A - 2S	157.1	6.19
K Bolt circle diameter	280	11.02
L Bolt holes, 8 off	33	1.30

8 bolts M30; holes 33 mm (1.30 in)

RAJENDRA INDUSTRIAL CORPORATION
rajendradatacenter.com
Drawing RIC-EN1092-11-PN63-DN150-B1
Scale 1:4 on A4
Units: mm (inches)
Date 2026-11-22
Quote: rajendradatacenter.com/rfq/
sales@rajendradatacenter.com
+91 74338 71355