Approx. weight

Material	kg	lb
Carbon steel	1.1	2.4
Stainless steel 304 and 304L	1.1	2.4
Stainless steel 316 and 316L	1.1	2.4

Densities 7.85, 7.9 and 8.0 g/cm3.
Calculated from the dimensions as the standard gives them, with no allowance for tolerance.

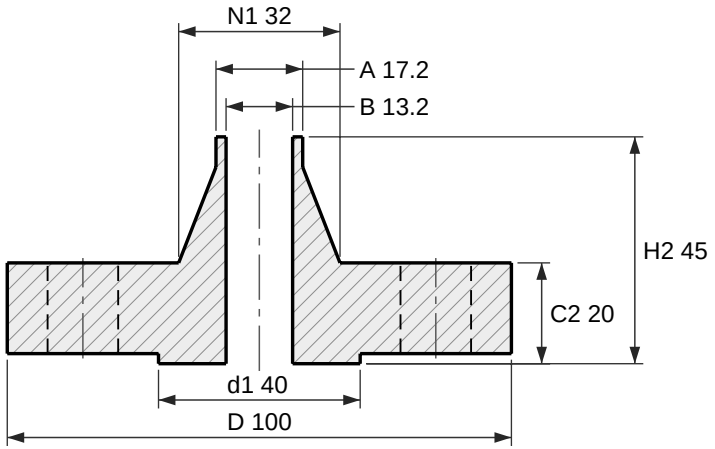

Section

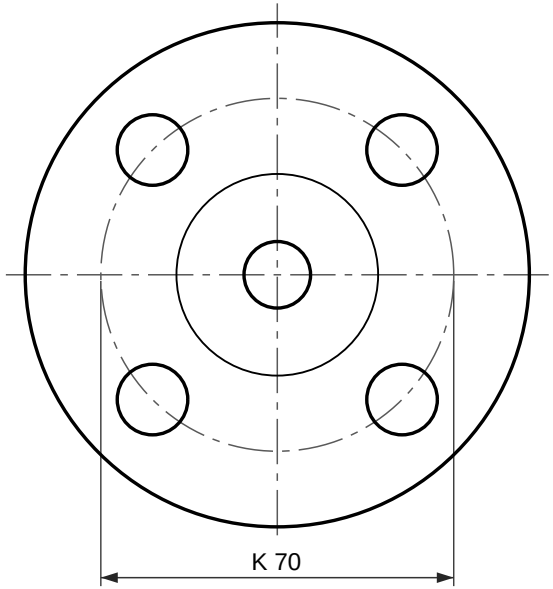

4 holes Ø14
Face view

Weld neck flange, EN 1092-1 type 11, PN 63

DN 10, facing type B1 (raised face), neck 17.2 × 2

Designation: Flange EN 1092-1/11/B1/DN 10/PN 63
Dimensions per EN 1092-1:2018, Table 16 (PN 63) and Table 8 (facing) and Annex A (wall thickness); tolerances per EN 1092-1.
C2 and H2 include the raised face f1, as EN 1092-1 measures it.
S is the minimum neck wall, from Annex A Table A.1; drawn at 2 mm. State the pipe wall in the order (for example DN 10 × 2).
EN 1092-1 gives PN 63 the same dimensions as PN 100 in DN 10; only the marking differs.
Reference drawing. The purchase order and EN 1092-1 govern.
Generated at rajendradatacenter.com/flanges/en-1092-1/

Dimension	mm	in
D Outside diameter	100	3.94
d1 Raised face diameter	40	1.57
f1 Raised face height	2	0.08
C2 Flange thickness, raised face included	20	0.79
H2 Length through hub, raised face included	45	1.77
N1 Hub diameter at back face	32	1.26
A Neck outside diameter (pipe OD)	17.2	0.68
S Neck wall thickness (min)	2	0.08
B Bore, A - 2S	13.2	0.52
K Bolt circle diameter	70	2.76
L Bolt holes, 4 off	14	0.55

4 bolts M12; holes 14 mm (0.55 in)

RAJENDRA INDUSTRIAL CORPORATION
rajendradatacenter.com
Drawing RIC-EN1092-11-PN63-DN10-B1
Scale 1:1.5 on A4
Units: mm (inches)
Date 2026-11-22
Quote: rajendradatacenter.com/rfq/
sales@rajendradatacenter.com
+91 74338 71355