Approx. weight

Material	kg	lb
Carbon steel	2.7	6.0
Stainless steel 304 and 304L	2.7	6.0
Stainless steel 316 and 316L	2.8	6.1

Densities 7.85, 7.9 and 8.0 g/cm3.
Calculated from the dimensions as the standard gives them, with no allowance for tolerance.

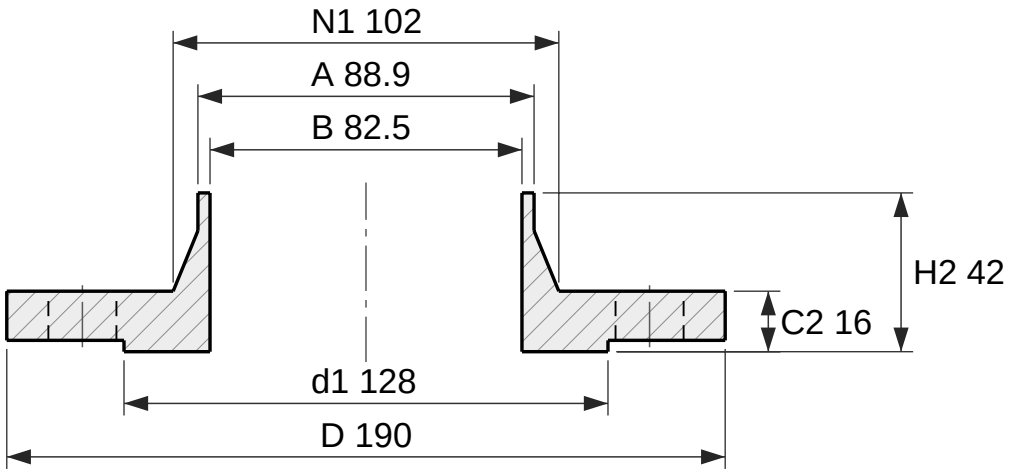

Section

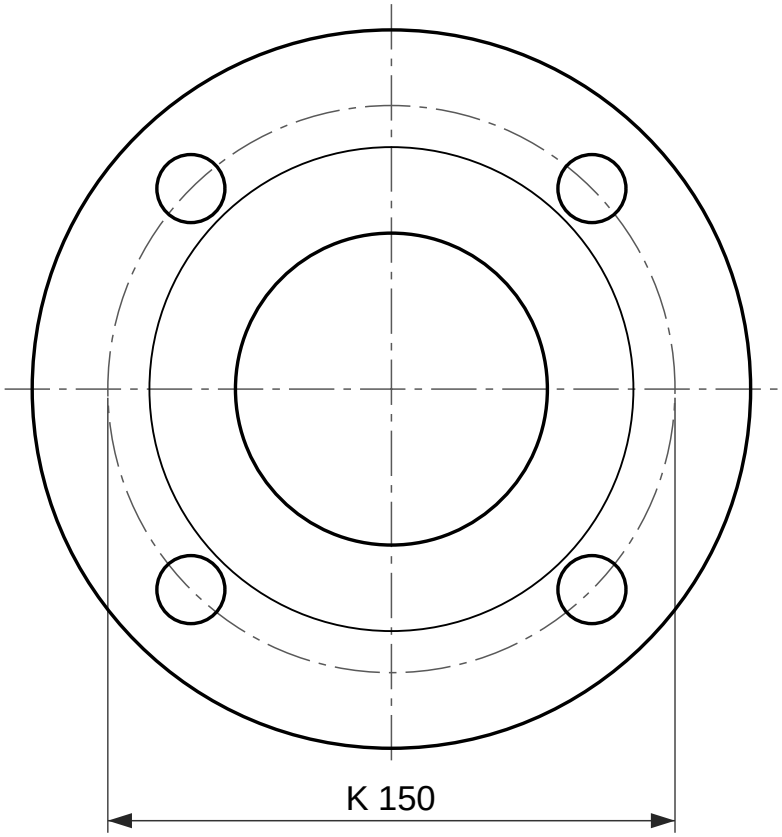

4 holes Ø18

Face view

Weld neck flange, EN 1092-1 type 11, PN 6

DN 80, facing type B1 (raised face), neck 88.9 × 3.2

Designation: Flange EN 1092-1/11/B1/DN 80/PN 6
Dimensions per EN 1092-1:2018, Table 11 (PN 6) and Table 8 (facing) and Annex A (wall thickness); tolerances per EN 1092-1.
C2 and H2 include the raised face f1, as EN 1092-1 measures it.
S is the minimum neck wall, from Annex A Table A.1; drawn at 3.2 mm. State the pipe wall in the order (for example DN 80 × 3.2).
Reference drawing. The purchase order and EN 1092-1 govern.
Generated at rajendradatacenter.com/flanges/en-1092-1/

Dimension	mm	in
D Outside diameter	190	7.48
d1 Raised face diameter	128	5.04
f1 Raised face height	3	0.12
C2 Flange thickness, raised face included	16	0.63
H2 Length through hub, raised face included	42	1.65
N1 Hub diameter at back face	102	4.02
A Neck outside diameter (pipe OD)	88.9	3.50
S Neck wall thickness (min)	3.2	0.13
B Bore, A - 2S	82.5	3.25
K Bolt circle diameter	150	5.91
L Bolt holes, 4 off	18	0.71

4 bolts M16; holes 18 mm (0.71 in)

RAJENDRA INDUSTRIAL CORPORATION
rajendradatacenter.com
Drawing RIC-EN1092-11-PN6-DN80-B1
Scale 1:2 on A4
Units: mm (inches)
Date 2026-11-22
Quote: rajendradatacenter.com/rfq/
sales@rajendradatacenter.com
+91 74338 71355