Approx. weight

Material	kg	lb
Carbon steel	21.3	46.8
Stainless steel 304 and 304L	21.4	47.1
Stainless steel 316 and 316L	21.7	47.7

Densities 7.85, 7.9 and 8.0 g/cm3.
Calculated from the dimensions as the standard gives them, with no allowance for tolerance.

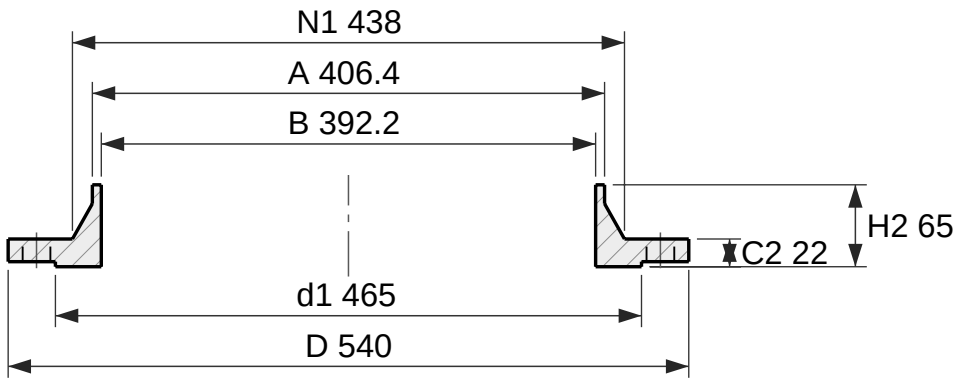

Section

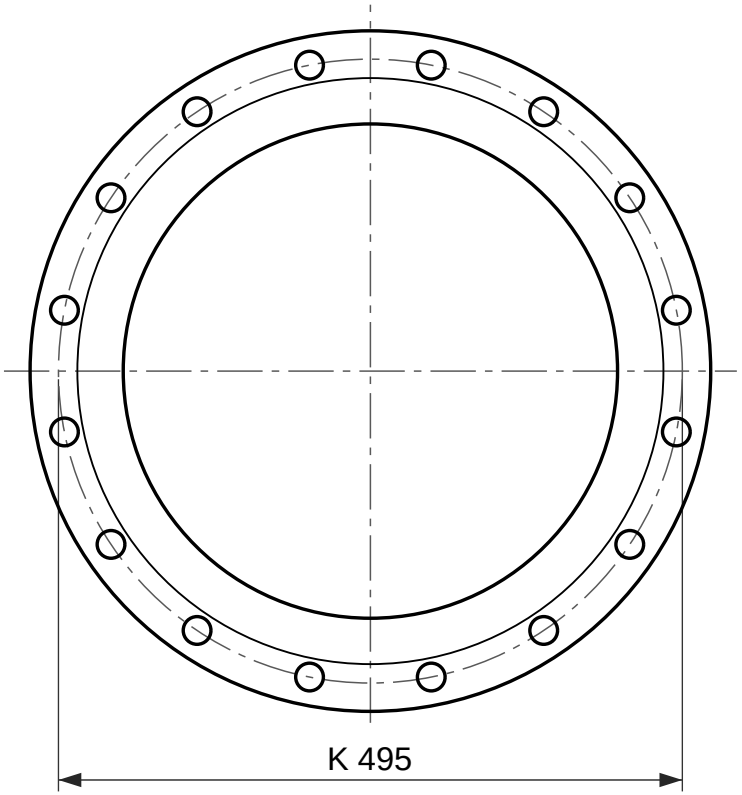

16 holes Ø22

Face view

Weld neck flange, EN 1092-1 type 11, PN 6

DN 400, facing type B1 (raised face), neck 406.4 × 7.1

Designation: Flange EN 1092-1/11/B1/DN 400/PN 6
Dimensions per EN 1092-1:2018, Table 11 (PN 6) and Table 8 (facing) and Annex A (wall thickness); tolerances per EN 1092-1.
C2 and H2 include the raised face f1, as EN 1092-1 measures it.
S is the minimum neck wall, from Annex A Table A.1; drawn at 7.1 mm. State the pipe wall in the order (for example DN 400 × 7.1).
Reference drawing. The purchase order and EN 1092-1 govern.
Generated at rajendradatacenter.com/flanges/en-1092-1/

Dimension	mm	in
D Outside diameter	540	21.26
d1 Raised face diameter	465	18.31
f1 Raised face height	4	0.16
C2 Flange thickness, raised face included	22	0.87
H2 Length through hub, raised face included	65	2.56
N1 Hub diameter at back face	438	17.24
A Neck outside diameter (pipe OD)	406.4	16.00
S Neck wall thickness (min)	7.1	0.28
B Bore, A - 2S	392.2	15.44
K Bolt circle diameter	495	19.49
L Bolt holes, 16 off	22	0.87

16 bolts M20; holes 22 mm (0.87 in)

RAJENDRA INDUSTRIAL CORPORATION
rajendradatacenter.com
Drawing RIC-EN1092-11-PN6-DN400-B1
Scale 1:6 on A4
Units: mm (inches)
Date 2026-11-22
Quote: rajendradatacenter.com/rfq/
sales@rajendradatacenter.com
+91 74338 71355